Ball Screw

THK General Catalog

Ball Screw

THK General Catalog

A Technical Descriptions of the Products

Features and Types A15-4
Features of the Ball Screw A15-4
- Driving Torque One Third of the Sliding Screw A15-4
- Ensuring High Accuracy A15-7
- Capable of Micro Feeding A15-8
- High Rigidity without Backlash A15-9
- Capable of Fast Feed A15-10

Types of Ball Screws A15-12

Point of Selection A15-14
Flowchart for Selecting a Ball Screw A15-14
Accuracy of the Ball Screw A15-17
- Lead Angle Accuracy A15-17
- Accuracy of the Mounting Surface A15-20
- Axial Clearance A15-25
- Preload A15-26

Selecting a Screw Shaft A15-30
- Maximum Length of the Screw Shaft A15-30
- Standard Combinations of Shaft Diameter and Lead for the Precision Ball Screw A15-32
- Standard Combinations of Shaft Diameter and Lead for the Rolled Ball Screw A15-33
- Permissible Axial Load A15-34
- Permissible Rotational Speed A15-36

Selecting a Nut A15-39
- Types of Nuts A15-39

Selecting a Model Number A15-42
- Calculating the Axial Load A15-42
- Static Safety Factor A15-43
- Studying the Service Life A15-44

Studying the Rigidity A15-47
- Axial Rigidity of the Feed Screw System A15-47

Studying the Positioning Accuracy A15-51
- Causes of Error in Positioning Accuracy A15-51
- Studying the Lead Angle Accuracy A15-51
- Studying the Axial Clearance A15-51
- Studying the Axial Clearance of the Feed Screw System A15-53
- Studying the Thermal Displacement through Heat Generation A15-55
- Studying the Orientation Change during Traveling A15-56

Studying the Rotational Torque A15-57
- Friction Torque Due to an External Load A15-57
- Torque Due to a Preload on the Ball Screw A15-58
- Torque Required for Acceleration A15-59
- Investigating the Terminal Strength of Ball Screw Shafts A15-60

Studying the Driving Motor A15-62
- When Using a Servomotor A15-62
- When Using a Stepping Motor (Pulse Motor) A15-64

Examples of Selecting a Ball Screw A15-65
- High-speed Transfer Equipment (Horizontal Use) A15-65
- Vertical Conveyance System A15-79

Feature of Each Model A15-91
Precision, Caged Ball Screw Models SBN, SBK and HBN A15-92
- Structure and Features A15-93
- Ball Cage Effect A15-93
- Types and Features A15-96
- Service Life A15-44
- Axial Clearance A15-25
- Accuracy Standards A15-18
- Example of Assembling Model HBN A15-97

DIN Standard compliant Ball Screw (DIN69051) Models EBA, EBB, EBC, EPA, EPB and EPC A15-98
- Structure and Features A15-99
- Types and Features A15-100
- Service Life A15-44
- Axial Clearance A15-25
- Accuracy Standards A15-101

Standard-Stock Precision Ball Screw Unfinished Shaft Ends Models BIF, BNFN, MDK, MBF and BNF A15-102
- Structure and Features A15-103
- Types and Features A15-104
- Service Life A15-44
- Nut Types and Axial Clearance A15-106

Standard-Stock Precision Ball Screw Finished Shaft Ends Model BNK A15-108
- Features A15-109
- Types and Features A15-109
- Table of Ball Screw Types with Finished Shaft Ends and the Corresponding Support Units and Nut Brackets A15-110

Precision Ball Screw Models BIF, DIK, BNFN, DKN, BLW, BNF, DK, MDK, BLK/WGF and BNT A15-112
- Structure and Features A15-113
- Types and Features A15-117
- Service Life A15-44
- Axial Clearance A15-25
- Accuracy Standards A15-18

Precision Rotary Ball Screw Models DIR and BLR A15-120
- Structure and Features A15-121
- Type A15-123
- Service Life A15-44
- Axial Clearance A15-25
- Accuracy Standards A15-124
- Example of Assembly A15-126

Precision Ball Screw / Spline Models BNS-A, BNS, NS-A and NS A15-128
- Structure and Features A15-129
- Type A15-130
- Service Life A15-44
- Axial Clearance A15-25
- Accuracy Standards A15-131
- Action Patterns A15-132
- Example of Assembly A15-135
- Example of Using the Spring Pad A15-136
- Precautions on Use A15-137

Rolled Ball Screw
Models JPF, BTK, MTF, BLK/WTF, CNF and BNT A15-138
• Structure and Features.... A15-139
• Types and Features.... A15-140
• Service Life A15-44
• Axial Clearance.... A15-25
• Accuracy Standards.... A15-18

Standard unfinished shaft ends
Rolled ball screw Model MTF A15-144
• Structure and Features.... A15-145
• Types and Features.... A15-145

Rolled Rotary Ball Screw Model BLR... A15-146
• Structure and Features.... A15-147
• Type.... A15-147
• Service Life A15-44
• Axial Clearance.... A15-25
• Accuracy Standards.... A15-148
• Example of Assembly A15-149

Ball Screw Peripherals A15-151
Support Unit Models EK, BK, FK, EF, BF and FF A15-152
• Structure and Features.... A15-152
• Type.... A15-154
• Types of Support Units and Applicable Screw Shaft Outer Diameters A15-155
• Model Numbers of Bearings and Characteristic Values A15-156
• Example of Installation A15-157
• Mounting Procedure A15-158
• Types of Recommended Shapes of the Shaft Ends. A15-160
Nut Bracket Model MC A15-162
• Structure and Features.... A15-162
• Type.... A15-162
Lock Nut Model RN A15-163
• Structure and Features.... A15-163
• Type.... A15-163

Options.... A15-165
Lubrication.... A15-166
Corrosion Prevention (Surface Treatment, etc.) A15-166
Contamination Protection A15-166
• QZ Lubricator A15-167
• Wiper Ring W A15-169
• Specifications of the Bellows.... A15-172

Mounting Procedure and Maintenance ... A15-174
Method for Mounting the Ball Screw Shaft. A15-174
Maintenance Method.... A15-176
• Amount of Lubricant.... A15-176

Model No. A15-177
• Model Number Coding A15-177
• Notes on Ordering A15-181

Precautions on Use.... A15-182

B Product Specifications (Separate)

Dimensional Drawing, Dimensional Table
Precision, Caged Ball Screw
Models SBN, SBK and HBN B15-5
DIN Standard compliant Ball Screw (DIN69051)
Models EBA, EBB, EBC, EPA, EPB and EPC .. B15-15
Standard-Stock Precision Ball Screw Unfinished Shaft Ends
Models BIF, BNFN, MDK, MBF and BNF.. B15-29
Standard-Stock Precision Ball Screw
Finished Shaft Ends Model BNK..... B15-53
Precision Ball Screw
Models BIF, DIK, BNFN, DKN, BLW, BNF, DK, MDK, BLK/WGF and BNT .. B15-97
Precision Rotary Ball Screw
Models DIR and BLR B15-165
Precision Ball Screw / Spline
Models BNS-A, BNS, NS-A and NS ... B15-171
Rolled Ball Screw
Models JPF, BTK, MTF, BLK/WTF, CNF and BNT B15-181
Unfinished Shaft Ends Rolled Ball Screw
Model MTF.... B15-193
Rolled Rotary Ball Screw Model BLR... B15-197

Maximum Length of the Ball Screw Shaft... B15-200

Ball Screw Peripherals.... B15-203
Model EK Square Type Support Unit on the Fixed Side .. B15-204
Model BK Square Type Support Unit on the Fixed Side .. B15-206
Model FK Round Type Support Unit on the Fixed Side.. B15-208
Model EF Square Type Support Unit on the Supported Side.. B15-212
Model BF Square Type Support Unit on the Supported Side.. B15-214
Model FF Round Type Support Unit on the Supported Side.. B15-216
Recommended Shapes of Shaft Ends - Shape
H (H1, H2 and H3) (Support Unit Models FK and EK) B15-218
Recommended Shapes of Shaft Ends - Shape
J (J1, J2 and J3) (Support Unit Model BK) B15-220
Recommended Shapes of Shaft Ends - Shape K
(Support Unit Models FF, EF and BF)..... B15-222
Nut bracket.... B15-224
Lock Nut.... B15-226

Options.... B15-227
Dimensions of the Ball Screw Nut Attached with Wiper Ring W and QZ Lubricator B15-228

* Please see the separate "B Product Specifications".

Features of the Ball Screw

Driving Torque One Third of the Sliding Screw

With the Ball Screw, balls roll between the screw shaft and the nut to achieve high efficiency. Its required driving torque is only one third of the conventional sliding screw. (See Fig.1 and Fig.2.) As a result, it is capable of not only converting rotational motion to straight motion, but also converting straight motion to rotational motion.

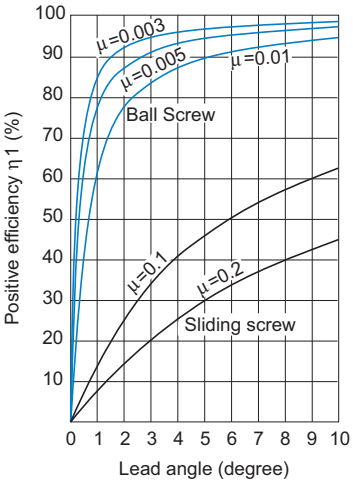

Fig.1 Positive Efficiency (Rotational to Linear)

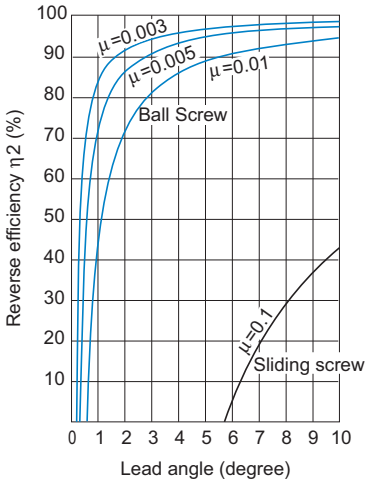

Fig.2 Reverse Efficiency (Linear to Rotational)

[Calculating the Lead Angle]

$$\tan\beta = \frac{Ph}{\pi \cdot d_P} \quad \cdots\cdots\cdots(1)$$

β	: Lead angle	(°)
d_P	: Ball center-to-center diameter	(mm)
Ph	: Feed screw lead	(mm)

[Relationship between Thrust and Torque]

The torque or the thrust generated when thrust or torque is applied is obtained from equations (2) to (4).

● **Driving Torque Required to Gain Thrust**

$$T = \frac{Fa \cdot Ph}{2\pi \cdot \eta 1} \quad \cdots\cdots\cdots (2)$$

T : Driving torque (N-mm)
Fa : Frictional resistance on the guide surface (N)
Fa=μ×mg
μ : Frictional coefficient of the guide surface
g : Gravitational acceleration (9.8 m/s²)
m : Mass of the transferred object (kg)
Ph : Feed screw lead (mm)
η1 : Positive efficiency of feed screw (see Fig.1 on A15-4)

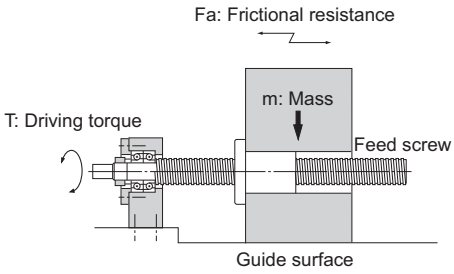

● **Thrust Generated When Torque is Applied**

$$Fa = \frac{2\pi \cdot \eta 1 \cdot T}{Ph} \quad \cdots\cdots\cdots (3)$$

Fa : Thrust generated (N)
T : Driving torque (N-mm)
Ph : Feed screw lead (mm)
η1 : Positive efficiency of feed screw (see Fig.1 on A15-4)

● **Torque Generated When Thrust is Applied**

$$T = \frac{Ph \cdot \eta 2 \cdot Fa}{2\pi} \quad \cdots\cdots\cdots (4)$$

T : Torque generated (N-m)
Fa : Thrust generated (N)
Ph : Feed screw lead (mm)
η2 : Reverse efficiency of feed screw (see Fig.2 on A15-4)

[Examples of Calculating Driving Torque]

When moving an object with a mass of 500 kg using a screw with an effective diameter of 33 mm and a lead length of 10 mm (lead angle: 5°30'), the required torque is obtained as follows.

Rolling guide (μ= 0.003)
Ball Screw (from μ= 0.003, η= 0.96)

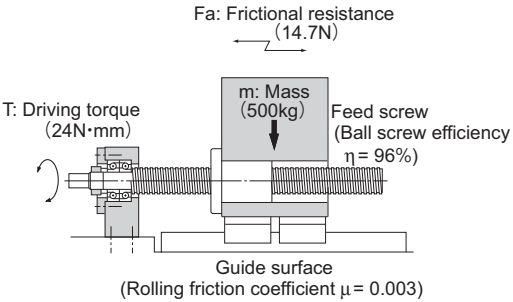

Frictional resistance on the guide surface

Fa=0.003×500×9.8=14.7N

Driving torque

$$T = \frac{14.7 \times 10}{2\pi \times 0.96} = 24\ \mathrm{N \cdot mm}$$

Rolling guide (μ= 0.003)
Ball Screw (from μ= 0.2, η= 0.32)

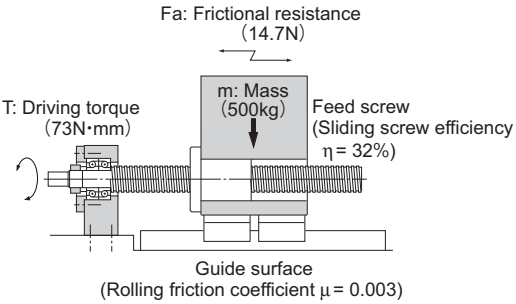

Frictional resistance on the guide surface

Fa=0.003×500×9.8=14.7N

Driving torque

$$T = \frac{14.7 \times 10}{2\pi \times 0.32} = 73\ \mathrm{N \cdot mm}$$

Ensuring High Accuracy

The Ball Screw is ground with the highest-level facilities and equipment at a strictly temperaturecon-trolled factory, Its accuracy is assured under a thorough quality control system that covers assembly to inspection.

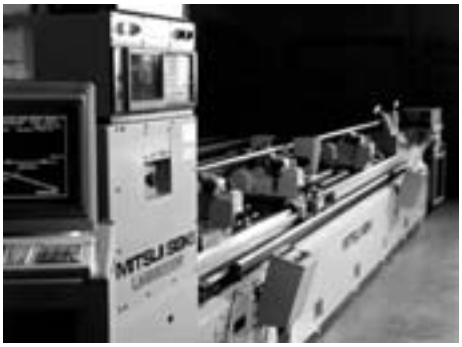

Automatic lead-measuring machine using laser

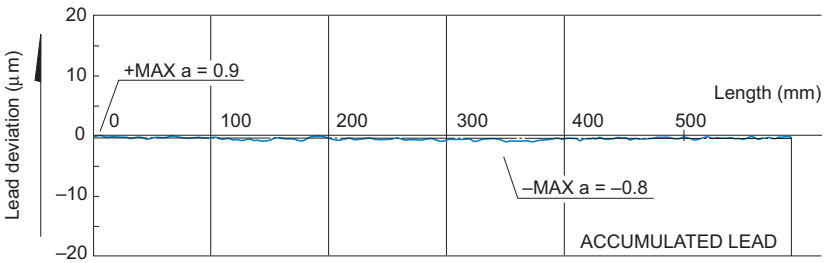

Fig.3 Lead Accuracy Measurement

[Conditions]
Model No.: BIF3205-10RRG0+903LC2

Table1 Lead Accuracy Measurement Unit: mm

Item	Standard value	Actual measurement
Directional target point	0	—
Representative travel distance error	±0.011	−0.0012
Fluctuation	0.008	0.0017

Capable of Micro Feeding

The Ball Screw requires a minimal starting torque due to its rolling motion, and does not cause a slip, which is inevitable with a sliding motion. Therefore, it is capable of an accurate micro feeding.
Fig.4 shows a travel distance of the Ball Screw in one-pulse, 0.1-μm feeding. (LM Guide is used for the guide surface.)

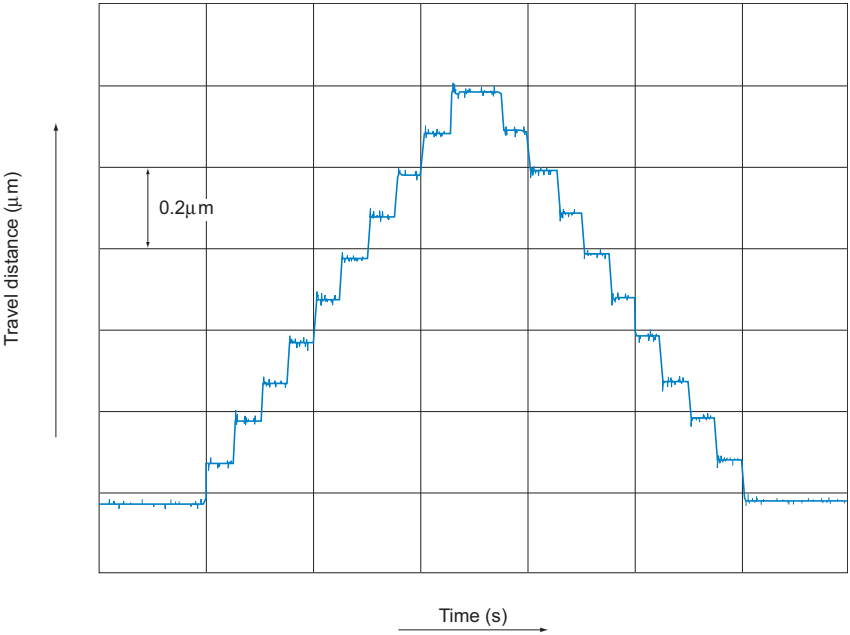

Fig.4 Data on Travel in 0.1-μm Feeding

High Rigidity without Backlash

Since the Ball Screw is capable of receiving a preload, the axial clearance can be reduced to below zero and the high rigidity is achieved because of the preload. In Fig.5, when an axial load is applied in the positive (+) direction, the table is displaced in the same (+) direction. When an axial load is provided in the reverse (-) direction, the table is displaced in the same (-) direction. Fig.6 shows the relationship between the axial load and the axial displacement. As indicated in Fig.6, as the direction of the axial load changes, the axial clearance occurs as a displacement. Additionally, when the Ball Screw is provided with a preload, it gains a higher rigidity and a smaller axial displacement than a zero clearance in the axial direction.

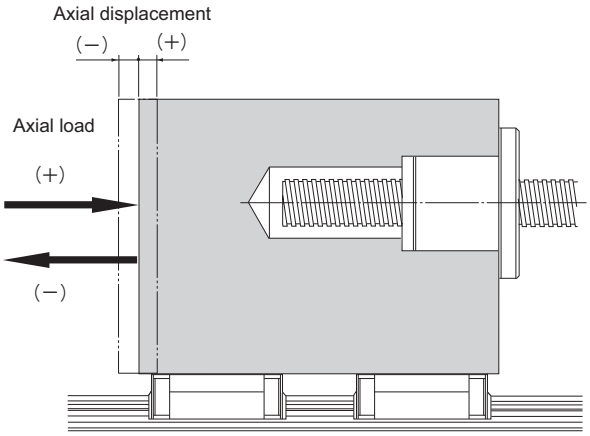

Fig.5

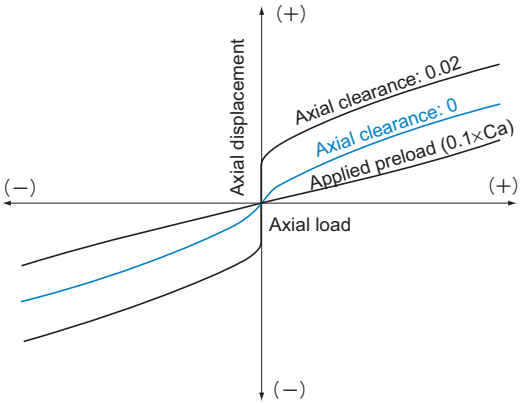

Fig.6 Axial Displacement in Relation to Axial Load

Capable of Fast Feed

Since the Ball Screw is highly efficient and generates little heat, it is capable of a fast feed.

[Example of High Speed]

Fig.7 shows a speed diagram for a large lead rolled Ball Screw operating at 2 m/s.

[Conditions]

Item	Description
Sample	Large Lead Rolled Ball Screw WTF3060 (Shaft diameter: 30mm; lead: 60mm)
Maximum speed	2m/s (Ball Screw rotational speed: 2,000 min^{-1})
Guide surface	LM Guide model SR25W

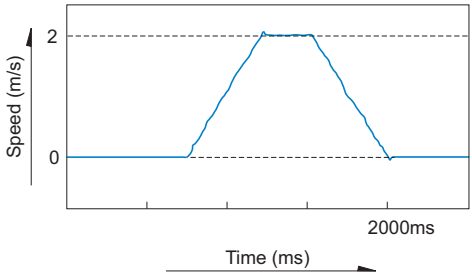

Fig.7 Velocity diagram

[Example of Heat Generation]

Fig.8 shows data on heat generation from the screw shaft when a Ball Screw is used in an operating pattern indicated in Fig.9

[Conditions]

Item	Description
Sample	Double-nut precision Ball Screw BNFN4010-5 (Shaft diameter: 40 mm; lead: 10 mm; applied preload: 2,700 N)
Maximum speed	0.217m/s (13m/min) (Ball Screw rotational speed: 1300 min^{-1})
Low speed	0.0042m/s (0.25m/min) (Ball Screw rotational speed: 25 min^{-1})
Guide surface	LM Guide model HSR35CA
Lubricant	Lithium-based grease (No. 2)

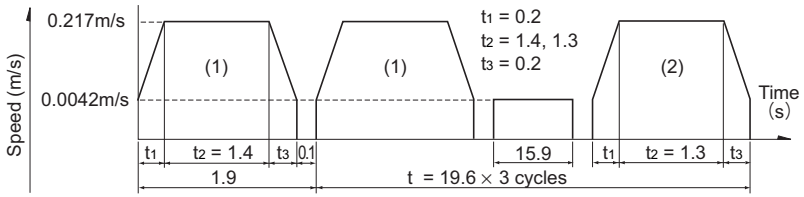

Fig.8 Operating Pattern

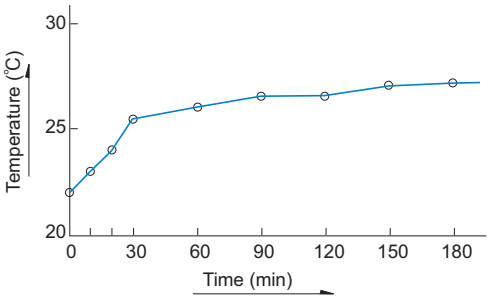

Fig.9 Ball Screw Heat Generation Data

Types of Ball Screws

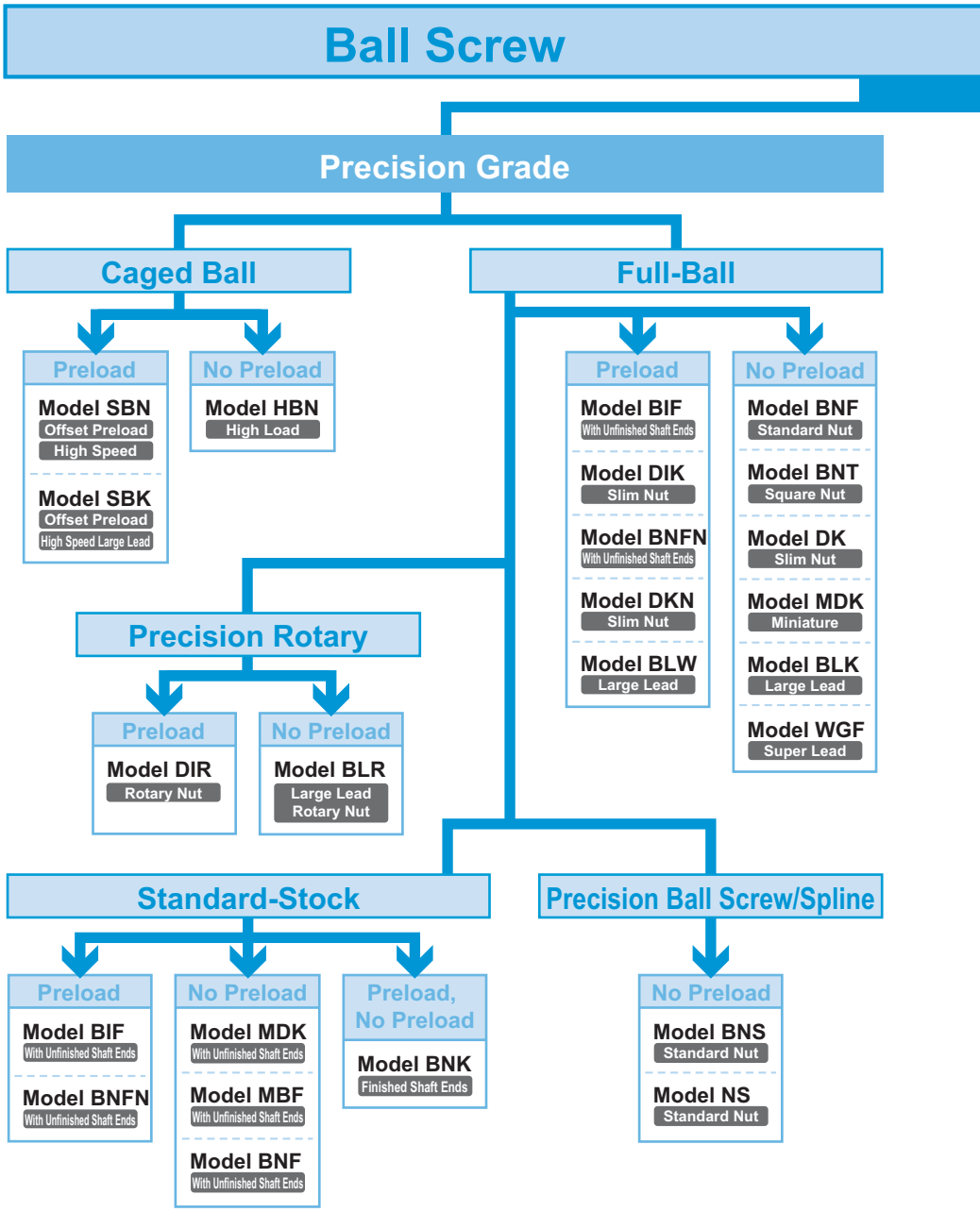

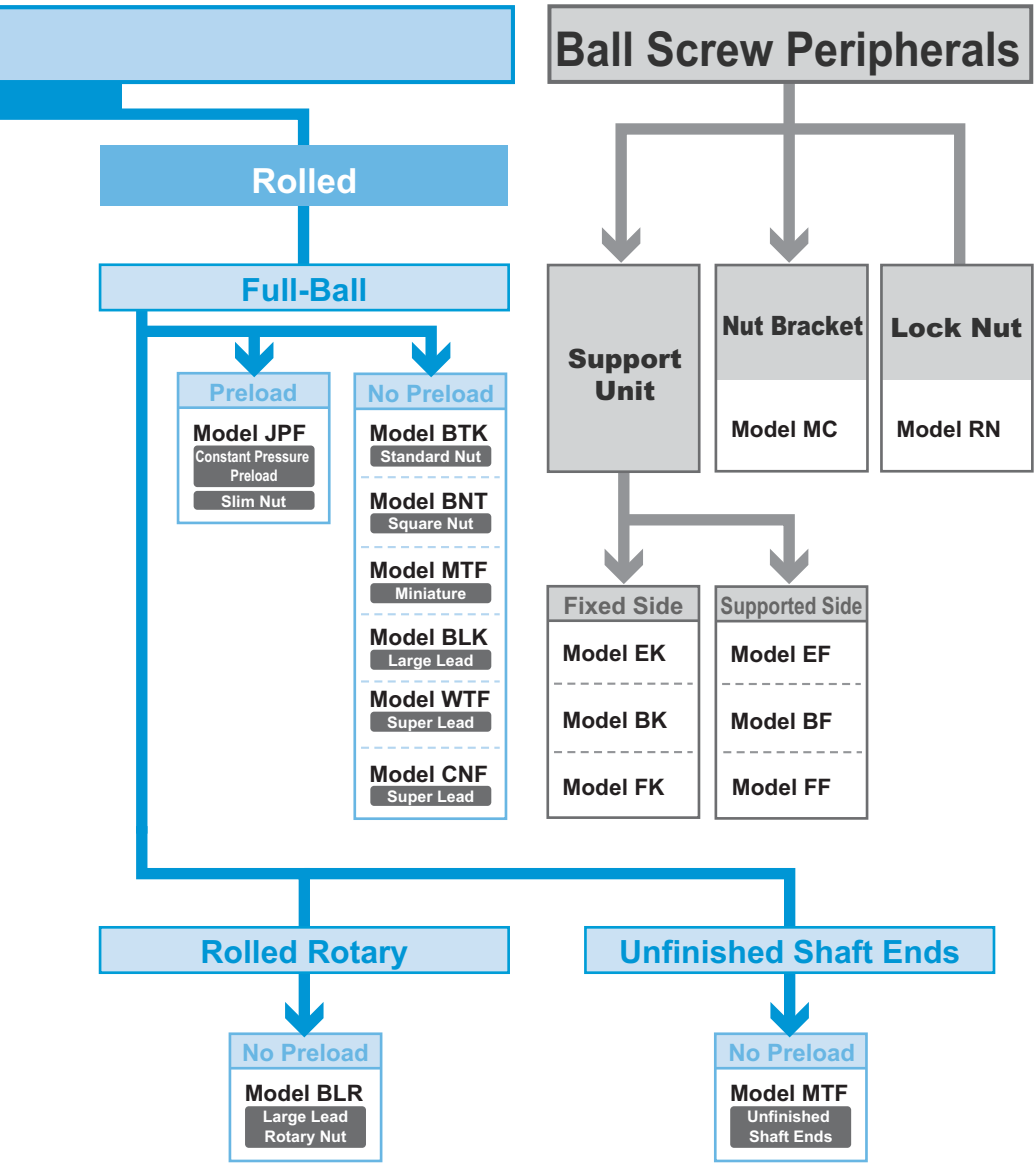
Ball Screw Peripherals
Rolled
Full-Ball
Preload
Model JPF
Constant Pressure Preload
Slim Nut
No Preload
Model BTK
Standard Nut
Model BNT
Square Nut
Model MTF
Miniature
Model BLK
Large Lead
Model WTF
Super Lead
Model CNF
Super Lead
Support Unit
Nut Bracket
Model MC
Lock Nut
Model RN
Fixed Side
Model EK
Model BK
Model FK
Supported Side
Model EF
Model BF
Model FF
Rolled Rotary
No Preload
Model BLR
Large Lead Rotary Nut
Unfinished Shaft Ends
No Preload
Model MTF
Unfinished Shaft Ends

Flowchart for Selecting a Ball Screw

[Ball Screw Selection Procedure]

When selecting a Ball Screw, it is necessary to make a selection while considering various parameters. The following is a flowchart for selecting a Ball Screw.

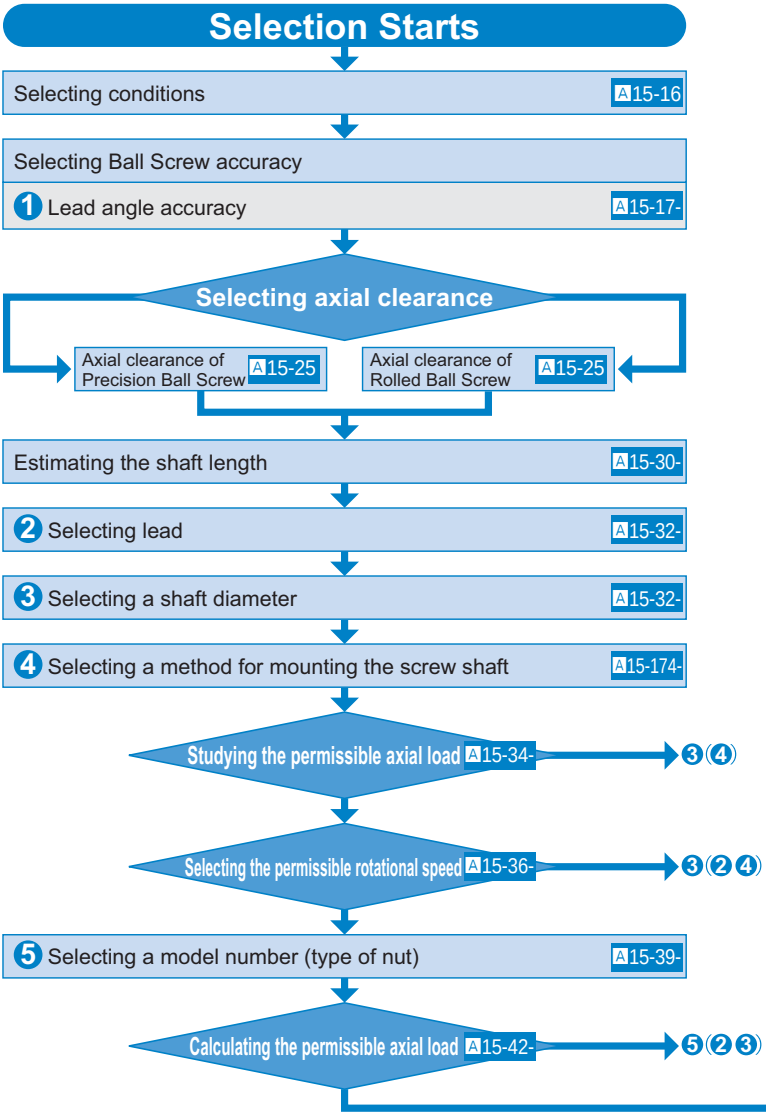

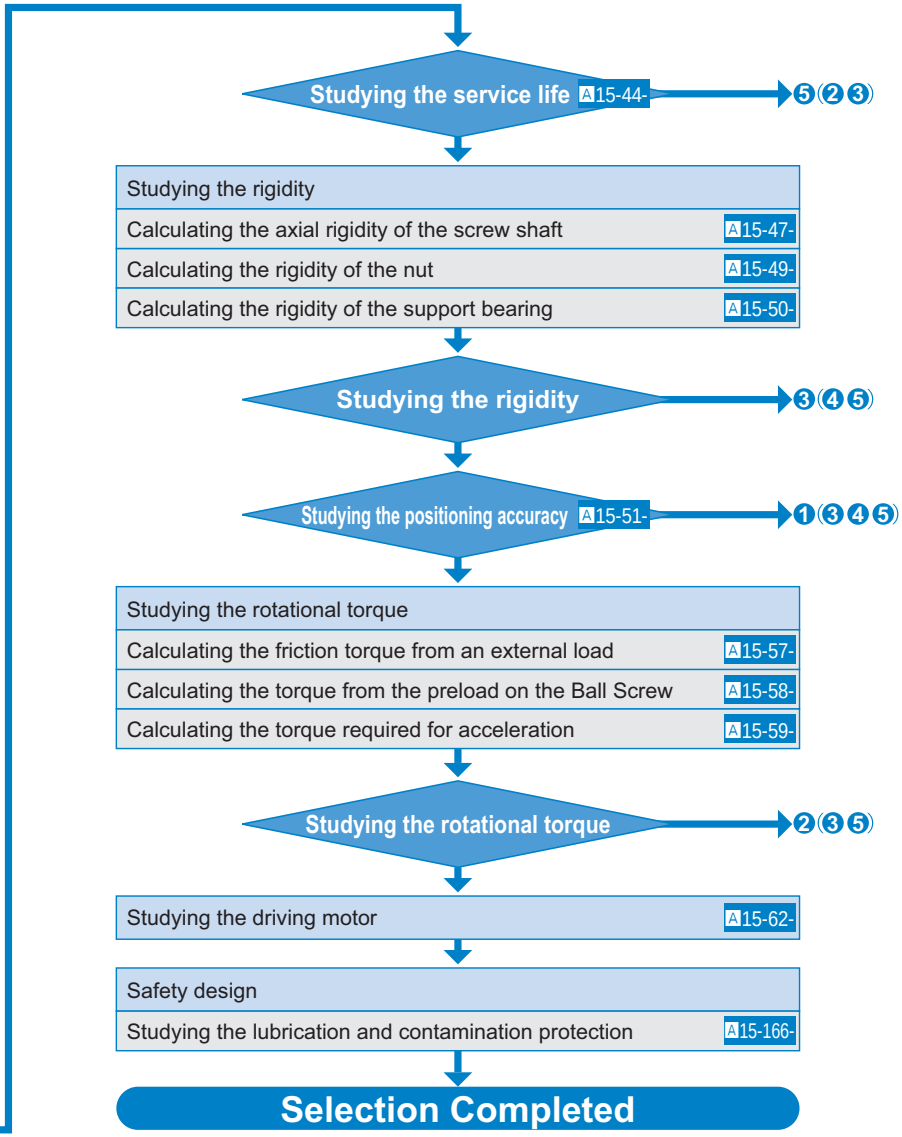
Studying the service life A15-44-
❺❷❸
Studying the rigidity
Calculating the axial rigidity of the screw shaft A15-47-
Calculating the rigidity of the nut A15-49-
Calculating the rigidity of the support bearing A15-50-
Studying the rigidity
❸❹❺
Studying the positioning accuracy A15-51-
❶❸❹❺
Studying the rotational torque
Calculating the friction torque from an external load A15-57-
Calculating the torque from the preload on the Ball Screw A15-58-
Calculating the torque required for acceleration A15-59-
Studying the rotational torque
❷❸❺
Studying the driving motor A15-62-
Safety design
Studying the lubrication and contamination protection A15-166-
Selection Completed

[Conditions of the Ball Screw]

The following conditions are required when selecting a Ball Screw.

Transfer orientation (horizontal, vertical, etc.)
Transferred mass m (kg)
Table guide method (sliding, rolling)
Frictional coefficient of the guide surface μ (-)
Guide surface resistance f (N)
External load in the axial direction F (N)
Desired service life time L_h (h)

Stroke length ℓ_s (mm)
Operating speed V_{max} (m/s)
Acceleration time t_1 (s)
Even speed time t_2 (s)
Deceleration time t_3 (s)

Acceleration

$$\alpha = \frac{V_{max}}{t_1} \quad (m/s^2)$$

Acceleration distance $\ell_1 = V_{max} \times t_1 \times 1000/2$ (mm)
Even speed distance $\ell_2 = V_{max} \times t_2 \times 1000$ (mm)
Deceleration distance $\ell_3 = V_{max} \times t_3 \times 1000/2$ (mm)
Number of reciprocations per minute n (min^{-1})

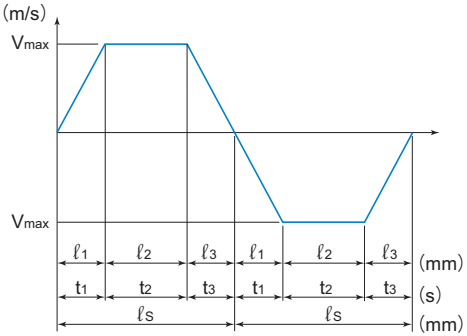

Velocity diagram

Positioning accuracy (mm)
Positioning accuracy repeatability (mm)
Backlash (mm)
Minimum feed amount s (mm/pulse)

Driving motor (AC servomotor, stepping motor, etc.)
The rated rotational speed of the motor N_{MO} (min^{-1})
Inertial moment of the motor J_M ($kg \cdot m^2$)
Motor resolution (pulse/rev)
Reduction ratio A (-)

Accuracy of the Ball Screw

Lead Angle Accuracy

The accuracy of the Ball Screw in the lead angle is controlled in accordance with the JIS standards (JIS B 1192 - 1997).
Accuracy grades C0 to C5 are defined in the linearity and the directional property, and C7 to C10 in the travel distance error in relation to 300 mm.

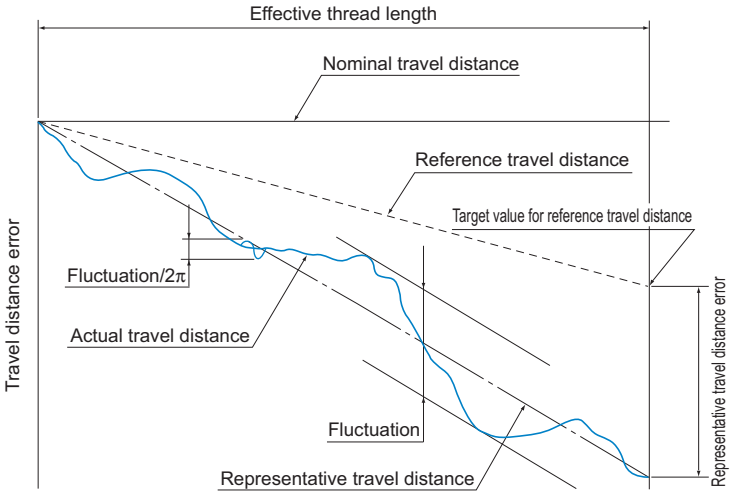

Fig.1 Terms on Lead Angle Accuracy

[Actual Travel Distance]
An error in the travel distance measured with an actual Ball Screw.

[Reference Travel Distance]
Generally, it is the same as nominal travel distance, but can be an intentionally corrected value of the nominal travel distance according to the intended use.

[Target Value for Reference Travel Distance]
You may provide some tension in order to prevent the screw shaft from runout, or set the reference travel distance in "negative" or "positive" value in advance given the possible expansion/contraction from external load or temperature. In such cases, indicate a target value for the reference travel distance.

[Representative Travel Distance]
It is a straight line representing the tendency in the actual travel distance, and obtained with the least squares method from the curve that indicates the actual travel distance.

[Representative Travel Distance Error (in ±)]
Difference between the representative travel distance and the reference travel distance.

[Fluctuation]
The maximum width of the actual travel distance between two straight lines drawn in parallel with the representative travel distance.

[Fluctuation/300]
Indicates a fluctuation against a given thread length of 300 mm.

[Fluctuation/2π]
A fluctuation in one revolution of the screw shaft.

Table1 Lead Angle Accuracy (Permissible Value) Unit: μm

		Precision Ball Screw										Rolled Ball Screw		
Accuracy grades		C0		C1		C2		C3		C5		C7	C8	C10
Effective thread length		Representative travel distance error	Fluctuation	Representative travel distance error	Fluctuation	Representative travel distance error	Fluctuation	Representative travel distance error	Fluctuation	Representative travel distance error	Fluctuation	Travel distance error	Travel distance error	Travel distance error
Above	Or less													
—	100	3	3	3.5	5	5	7	8	8	18	18	±50/ 300mm	±100/ 300mm	±210/ 300mm
100	200	3.5	3	4.5	5	7	7	10	8	20	18			
200	315	4	3.5	6	5	8	7	12	8	23	18			
315	400	5	3.5	7	5	9	7	13	10	25	20			
400	500	6	4	8	5	10	7	15	10	27	20			
500	630	6	4	9	6	11	8	16	12	30	23			
630	800	7	5	10	7	13	9	18	13	35	25			
800	1000	8	6	11	8	15	10	21	15	40	27			
1000	1250	9	6	13	9	18	11	24	16	46	30			
1250	1600	11	7	15	10	21	13	29	18	54	35			
1600	2000	—	—	18	11	25	15	35	21	65	40			
2000	2500	—	—	22	13	30	18	41	24	77	46			
2500	3150	—	—	26	15	36	21	50	29	93	54			
3150	4000	—	—	30	18	44	25	60	35	115	65			
4000	5000	—	—	—	—	52	30	72	41	140	77			
5000	6300	—	—	—	—	65	36	90	50	170	93			
6300	8000	—	—	—	—	—	—	110	60	210	115			
8000	10000	—	—	—	—	—	—	—	—	260	140			

Note) Unit of effective thread length: mm

Table2 Fluctuation in Thread Length of 300 mm and in One Revolution (permissible value) Unit: μm

Accuracy grades	C0	C1	C2	C3	C5	C7	C8	C10
Fluctuation/300	3.5	5	7	8	18	—	—	—
Fluctuation/2π	3	4	5	6	8	—	—	—

Table3 Types and Grades

Type	Series symbol	Grade	Remarks
For positioning	Cp	1, 3, 5	ISO compliant
For transport	Ct	1, 3, 5, 7, 10	

Note1) Accuracy Grades for DIN Standard Compliant Ball Screws, see A15-101.
Note2) Accuracy grades apply also to the Cp series and Ct series. Contact THK for details.

Example: When the lead of a Ball Screw manufactured is measured with a target value for the reference travel distance of −9 μm/500 mm, the following data are obtained.

Table4 Measurement Data on Travel Distance Error

Unit: mm

Command position (A)	0	50	100	150
Travel distance (B)	0	49.998	100.001	149.996
Travel distance error (A−B)	0	−0.002	+0.001	−0.004

Command position (A)	200	250	300	350
Travel distance (B)	199.995	249.993	299.989	349.885
Travel distance error (A−B)	−0.005	−0.007	−0.011	−0.015

Command position (A)	400	450	500
Travel distance (B)	399.983	449.981	499.984
Travel distance error (A−B)	−0.017	−0.019	−0.016

The measurement data are expressed in a graph as shown in Fig.2.
The positioning error (A-B) is indicated as the actual travel distance while the straight line representing the tendency of the (A-B) graph refers to the representative travel distance.
The difference between the reference travel distance and the representative travel distance appears as the representative travel distance error.

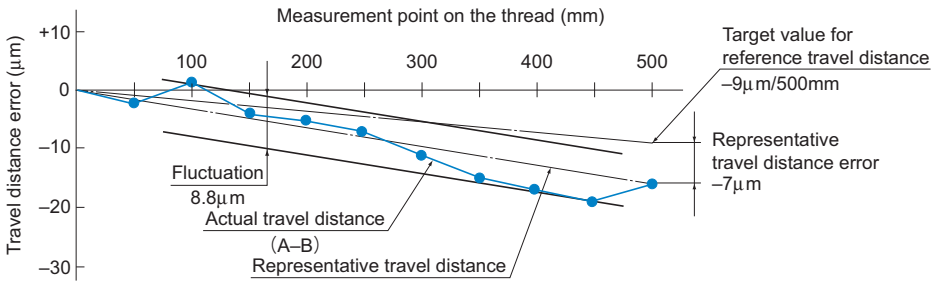

Fig.2 Measurement Data on Travel Distance Error

[Measurements]
Representative travel distance error: -7μm
Fluctuation: 8.8μm

Accuracy of the Mounting Surface

The accuracy of the Ball Screw mounting surface complies with the JIS standard (JIS B 1192-1997).

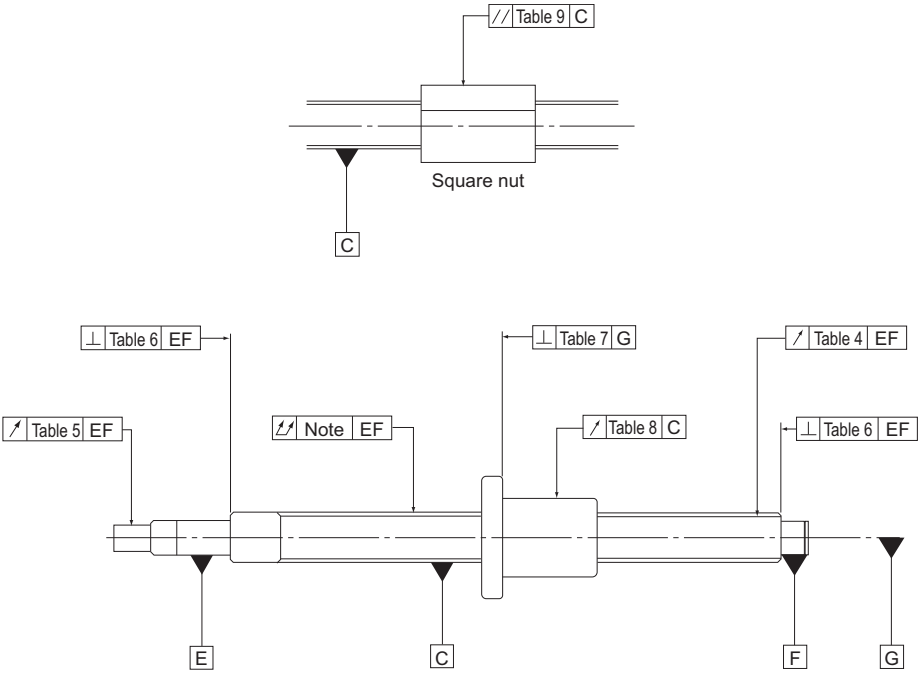

Note) For the overall radial runout of the screw shaft axis, refer to JIS B 1192-1997.

Fig.3 Accuracy of the Mounting Surface of the Ball Screw

[Accuracy Standards for the Mounting Surface]

Table5 to Table9 show accuracy standards for the mounting surfaces of the precision Ball Screw.

Table5 Radial Runout of the Circumference of the Thread Root in Relation to the Supporting Portion Axis of the Screw Shaft

Unit: μm

Screw shaft outer diameter (mm)		Runout (maximum)					
Above	Or less	C0	C1	C2	C3	C5	C7
—	8	3	5	7	8	10	14
8	12	4	5	7	8	11	14
12	20	4	6	8	9	12	14
20	32	5	7	9	10	13	20
32	50	6	8	10	12	15	20
50	80	7	9	11	13	17	20
80	100	—	10	12	15	20	30

Note) The measurements on these items include the effect of the runout of the screw shaft diameter. Therefore, it is necessary to obtain the correction value from the overall runout of the screw shaft axis, using the ratio of the distance between the fulcrum and measurement point to the overall screw shaft length, and add the obtained value to the table above.

Example: model No. DIK2005-6RRGO+500LC5

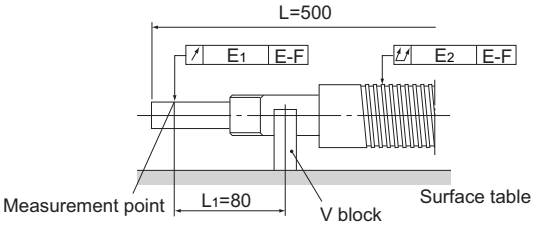

$$E_1 = e + \Delta e$$

e : Standard value in Table5 (0.012)

Δe : Correction value

$$\Delta e = \frac{L_1}{L} \times E_2$$

$$= \frac{80}{500} \times 0.06$$

$$= 0.01$$

E_2 : Overall radial runout of the screw shaft axis (0.06)

$$E_1 = 0.012 + 0.01$$

$$= 0.022$$

Table6 Perpendicularity of the Supporting Portion End of the Screw Shaft to the Supporting Portion Axis

Unit: µm

Screw shaft outer diameter (mm)		Perpendicularity (maximum)					
Above	Or less	C0	C1	C2	C3	C5	C7
—	8	2	3	3	4	5	7
8	12	2	3	3	4	5	7
12	20	2	3	3	4	5	7
20	32	2	3	3	4	5	7
32	50	2	3	3	4	5	8
50	80	3	4	4	5	7	10
80	100	—	4	5	6	8	11

Table7 Perpendicularity of the Flange Mounting Surface of the Screw Shaft to the Screw Shaft Axis

Unit: µm

Nut diameter (mm)		Perpendicularity (maximum)					
Above	Or less	C0	C1	C2	C3	C5	C7
—	20	5	6	7	8	10	14
20	32	5	6	7	8	10	14
32	50	6	7	8	8	11	18
50	80	7	8	9	10	13	18
80	125	7	9	10	12	15	20
125	160	8	10	11	13	17	20
160	200	—	11	12	14	18	25

Table8 Radial Runout of the Nut Circumference in Relation to the Screw Shaft Axis

Unit: µm

Nut diameter (mm)		Runout (maximum)					
Above	Or less	C0	C1	C2	C3	C5	C7
—	20	5	6	7	9	12	20
20	32	6	7	8	10	12	20
32	50	7	8	10	12	15	30
50	80	8	10	12	15	19	30
80	125	9	12	16	20	27	40
125	160	10	13	17	22	30	40
160	200	—	16	20	25	34	50

Table9 Parallelism of the Nut Circumference (Flat Mounting Surface) to the Screw Shaft Axis

Unit: µm

Mounting reference length (mm)		Parallelism (maximum)					
Above	Or less	C0	C1	C2	C3	C5	C7
—	50	5	6	7	8	10	17
50	100	7	8	9	10	13	17
100	200	—	10	11	13	17	30

[Method for Measuring Accuracy of the Mounting Surface]

- **Radial Runout of the Circumference of the Part Mounting Section in Relation to the Supporting Portion Axis of the Screw Shaft (see Table5 on A15-21)**

Support the supporting portion of the screw shaft with V blocks. Place a probe on the circumference of the part mounting section, and read the largest difference on the dial gauge as a measurement when turning the screw shaft by one revolution.

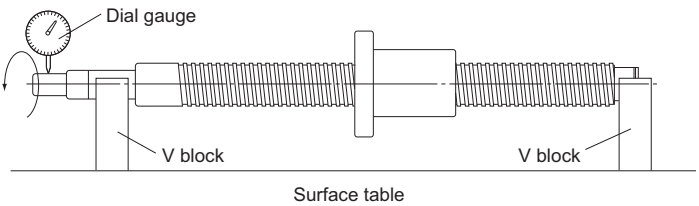

- **Radial Runout of the Circumference of the Thread Root in Relation to the Supporting Portion Axis of the Screw Shaft (see Table5 on A15-21)**

Support the supporting portion of the screw shaft with V blocks. Place a probe on the circumference of the nut, and read the largest difference on the dial gauge as a measurement when turning the screw shaft by one revolution without turning the nut.

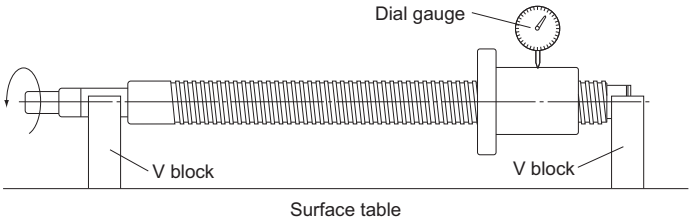

- **Perpendicularity of the Supporting Portion End of the Screw Shaft to the Supporting Portion Axis (see Table6 on A15-22)**

Support the supporting portion of the screw shaft with V blocks. Place a probe on the screw shaft's supporting portion end, and read the largest difference on the dial gauge as a measurement when turning the screw shaft by one revolution.

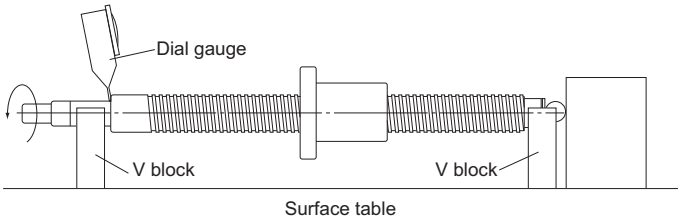

- **Perpendicularity of the Flange Mounting Surface of the Screw Shaft to the Screw Shaft Axis (see Table7 on A15-22)**

Support the thread of the screw shaft with V blocks near the nut. Place a probe on the flange end, and read the largest difference on the dial gauge as a measurement when simultaneously turning the screw shaft and the nut by one revolution.

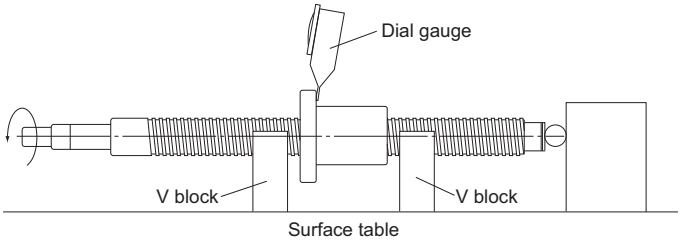

● **Radial Runout of the Nut Circumference in Relation to the Screw Shaft Axis (see Table8 on A15-22)**

Support the thread of the screw shaft with V blocks near the nut. Place a probe on the circumference of the nut, and read the largest difference on the dial gauge as a measurement when turning the nut by one revolution without turning the screw shaft.

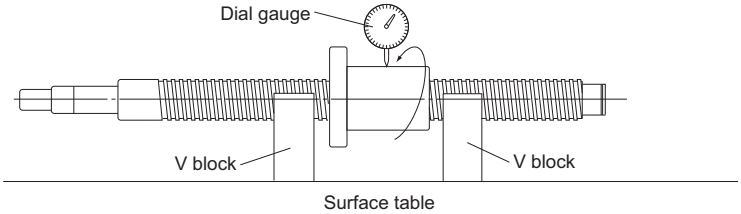

● **Parallelism of the Nut Circumference (Flat Mounting Surface) to the Screw Shaft Axis (see Table9 on A15-22)**

Support the thread of the screw shaft with V blocks near the nut. Place a probe on the circumference of the nut (flat mounting surface), and read the largest difference on the dial gauge as a measurement when moving the dial gauge in parallel with the screw shaft.

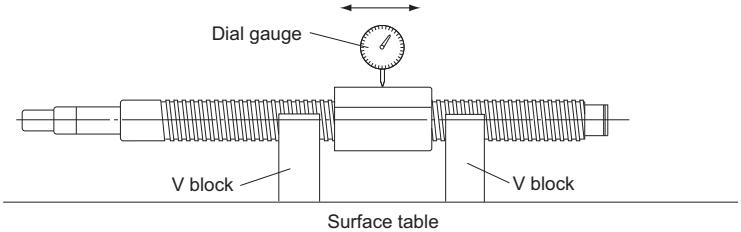

● **Overall Radial Runout of the Screw Shaft Axis**

Support the supporting portion of the screw shaft with V blocks. Place a probe on the circumference of the screw shaft, and read the largest difference on the dial gauge at several points in the axial directions as a measurement when turning the screw shaft by one revolution.

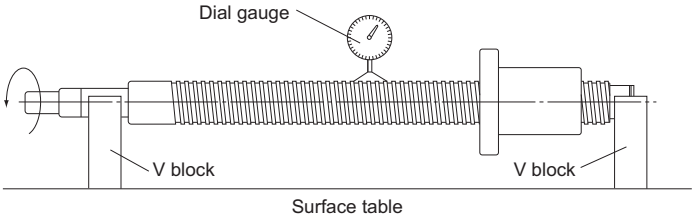

Note) For the overall radial runout of the screw shaft axis, refer to JIS B 1192-1997.

Axial Clearance

[Axial Clearance of the Precision Ball Screw]

Table10 shows the axial clearance of the precision Screw Ball. If the manufacturing length exceeds the value in Table11, the resultant clearance may partially be negative (preload applied).
The manufacturing limit lengths of the Ball Screws compliant with the DIN standard are provided in Table12.

Table10 Axial Clearance of the Precision Ball Screw

Unit: mm

Clearance symbol	G0	GT	G1	G2	G3
Axial clearance	0 or less	0 to 0.005	0 to 0.01	0 to 0.02	0 to 0.05

Table11 Maximum Length of the Precision Ball Screw in Axial Clearance

Unit: mm

Screw shaft outer diameter	Overall thread length						
	Clearance GT		Clearance G1		Clearance G2		
	C0 to C3	C5	C0 to C3	C5	C0 to C3	C5	C7
4 to 6	80	100	80	100	80	100	120
8 to 10	250	200	250	250	250	300	300
12 to 16	500	400	500	500	700	600	500
18 to 25	800	700	800	700	1000	1000	1000
28 to 32	900	800	1100	900	1400	1200	1200
36 to 45	1000	800	1300	1000	2000	1500	1500
50 to 70	1200	1000	1600	1300	2500	2000	2000
80 to 100	—	—	1800	1500	4000	3000	3000

* When manufacturing the Ball Screw of precision-grade accuracy C7 with clearance GT or G1, the resultant clearance is partially negative.

Table12 Manufacturing limit lengths of precision Ball Screws with axial clearances (DIN standard compliant Ball Screws)

Unit: mm

Shaft diameter	Clearance GT		Clearance G1		Clearance G2		
	C3, Cp3	C5, Cp5, Ct5	C3, Cp3	C5, Cp5, Ct5	C3, Cp3	C5, Cp5, Ct5	C7, Cp7
16	500	400	500	500	700	600	500
20, 25	800	700	800	700	1000	1000	1000
32	900	800	1100	900	1400	1200	1200
40	1000	800	1300	1000	2000	1500	1500
50, 63	1200	1000	1600	1300	2500	2000	2000

* When manufacturing the Ball Screw of precision-grade accuracy C7 (Ct7) with clearance GT or G1, the resultant clearance is partially negative.

[Axial Clearance of the Rolled Ball Screw]

Table13 shows axial clearance of the rolled Ball Screw.

Table13 Axial Clearance of the Rolled Ball Screw

Unit: mm

Screw shaft outer diameter	Axial clearance (maximum)
6 to 12	0.05
14 to 28	0.1
30 to 32	0.14
36 to 45	0.17
50	0.2

Preload

A preload is provided in order to eliminate the axial clearance and minimize the displacement under an axial load.
When performing a highly accurate positioning, a preload is generally provided.

[Rigidity of the Ball Screw under a Preload]

When a preload is provided to the Ball Screw, the rigidity of the nut is increased.
Fig.4 shows elastic displacement curves of the Ball Screw under a preload and without a preload.

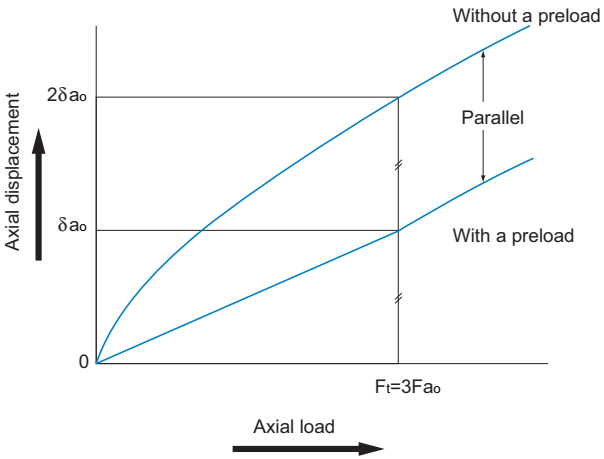

Fig.4 Elastic Displacement Curve of the Ball Screw

Fig.5 shows a double-nut type of the Ball Screw.

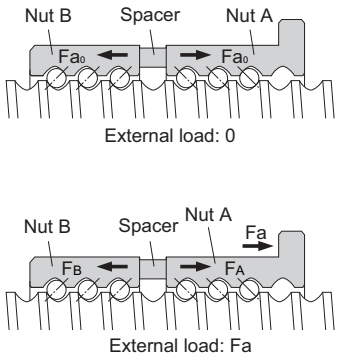

Fig.5

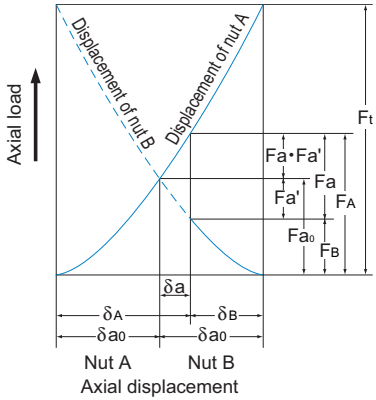

Fig.6

Nuts A and B are provided with preload Fa_0 from the spacer. Because of the preload, nuts A and B are elastically displaced by δa_0 each. If an axial load (Fa) is applied from outside in this state, the displacement of nuts A and B is calculated as follows.

$$\delta_A = \delta a_0 + \delta a \qquad \delta_B = \delta a_0 - \delta a$$

In other words, the loads on nut A and B are expressed as follows:

$$F_A = Fa_0 + (Fa - Fa') \qquad F_B = Fa_0 - Fa'$$

Therefore, under a preload, the load that nut A receives equals to Fa - Fa'. This means that since load Fa', which is applied when nut A receives no preload, is deducted from Fa, the displacement of nut A is smaller.
This effect extends to the point where the displacement (δa_0) caused by the preload applied on nut B reaches zero.
To what extent is the elastic displacement reduced? The relationship between the axial load on the Ball Screw under no preload and the elastic displacement can be expressed by $\delta a \propto Fa^{2/3}$. From Fig.6, the following equations are established.

$$\delta a_0 = KFa_0^{2/3} \qquad (K : \text{constant})$$

$$2\delta a_0 = KF_t^{2/3}$$

$$\left(\frac{F_t}{Fa_0}\right)^{\frac{2}{3}} = 2 \qquad F_t = 2^{3/2} \times Fa_0 = 2.8Fa_0 \fallingdotseq 3Fa_0$$

Thus, the Ball Screw under a preload is displaced by δa_0 when an axial load (F_t) approximately three times greater than the preload is provided from outside. As a result, the displacement of the Ball Screw under a preload is half the displacement ($2\delta a_0$) of the Ball Screw without a preload.
As stated above, since the preloading is effective up to approximately three times the applied preload, the optimum preload is one third of the maximum axial load.
Note, however, that an excessive preload adversely affects the service life and heat generation. As a guideline, the maximum preload should be set at 10% of the basic dynamic load rating (Ca) at a maximum.

[Preload Torque]

The preload torque of the Ball Screw in lead is controlled in accordance with the JIS standard (JIS B 1192-1997).

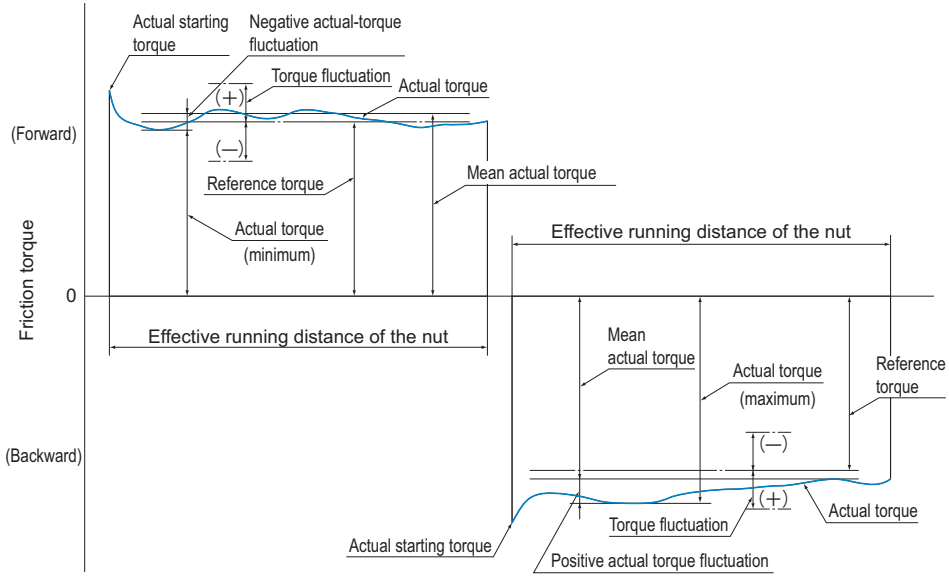

Fig.7 Terms on Preload Torque

● **Dynamic Preload Torque**

A torque required to continuously rotate the screw shaft of a Ball Screw under a given preload without an external load applied.

● **Actual Torque**

A dynamic preload torque measured with an actual Ball Screw.

● **Torque Fluctuation**

Variation in a dynamic preload torque set at a target value. It can be positive or negative in relation to the reference torque.

● **Coefficient of Torque Fluctuation**

Ratio of torque fluctuation to the reference torque.

● **Reference Torque**

A dynamic preload torque set as a target.

● **Calculating the Reference Torque**

The reference torque of a Ball Screw provided with a preload is obtained in the following equation (5).

$$T_p = 0.05\,(\tan\beta)^{-0.5}\,\frac{Fa_0 \cdot Ph}{2\pi} \quad \cdots\cdots\cdots (5)$$

T_p	: Reference torque	(N-mm)
β	: Lead angle	
Fa_0	: Applied preload	(N)
Ph	: Lead	(mm)

Example: When a preload of 3,000 N is provided to the Ball Screw model BNFN4010-5G0 + 1500LC3 with a thread length of 1,300 mm (shaft diameter: 40 mm; ball center-to-center diameter: 41.75 mm; lead: 10 mm), the preload torque of the Ball Screw is calculated in the steps below.

■Calculating the Reference Torque

β : Lead angle

$$\tan\beta = \frac{\text{lead}}{\pi \times \text{ball center-to-center diameter}} = \frac{10}{\pi \times 41.75} = 0.0762$$

Fa_0 : Applied preload=3000N
Ph : Lead = 10mm

$$T_p = 0.05\,(\tan\beta)^{-0.5}\,\frac{Fa_0 \cdot Ph}{2\pi} = 0.05\,(0.0762)^{-0.5}\,\frac{3000 \times 10}{2\pi} = 865\text{N}\cdot\text{mm}$$

■Calculating the Torque Fluctuation

$$\frac{\text{thread length}}{\text{screw shaft outer diameter}} = \frac{1300}{40} = 32.5 \leqq 40$$

Thus, with the reference torque in Table14 being between 600 and 1,000 N-mm, effective thread length 4,000 mm or less and accuracy grade C3, the coefficient of torque fluctuation is obtained as ±30%.
As a result, the torque fluctuation is calculated as follows.
865×(1±0.3) = 606 N・mm to 1125 N・mm

■Result

Reference torque : 865 N-mn
Torque fluctuation : 606 N-mm to 1125 N-mm

Table14 Tolerance Range in Torque Fluctuation

Reference torque N・mm		Effective thread length									
		4000mm or less								Above 4,000 mm and 10,000 mm or less	
		$\frac{\text{thread length}}{\text{screw shaft outer diameter}} \leqq 40$				$40 < \frac{\text{thread length}}{\text{screw shaft outer diameter}} < 60$				—	
		Accuracy grades				Accuracy grades				Accuracy grades	
Above	Or less	C0	C1	C2, C3	C5	C0	C1	C2, C3	C5	C2, C3	C5
200	400	±35%	±40%	±45%	±55%	±45%	±45%	±55%	±65%	—	—
400	600	±25%	±30%	±35%	±45%	±38%	±38%	±45%	±50%	—	—
600	1000	±20%	±25%	±30%	±35%	±30%	±30%	±35%	±40%	±40%	±45%
1000	2500	±15%	±20%	±25%	±30%	±25%	±25%	±30%	±35%	±35%	±40%
2500	6300	±10%	±15%	±20%	±25%	±20%	±20%	±25%	±30%	±30%	±35%
6300	10000	—	—	±15%	±20%	—	—	±20%	±25%	±25%	±30%

Selecting a Screw Shaft

Maximum Length of the Screw Shaft

Table15 shows the manufacturing limit lengths of precision Ball Screws by accuracy grades, Table16 shows the manufacturing limit lengths of precision Ball Screws compliant with DIN standard by accuracy grades, and Table17 shows the manufacturing limit lengths of rolled Ball Screws by accuracy grades.
If the shaft dimensions exceed the manufacturing limit in Table15,Table16 or Table17, contact THK.

Table15 Maximum Length of the Precision Ball Screw by Accuracy Grade Unit: mm

Screw shaft outer diameter	Overall screw shaft length					
	C0	C1	C2	C3	C5	C7
4	90	110	120	120	120	120
6	150	170	210	210	210	210
8	230	270	340	340	340	340
10	350	400	500	500	500	500
12	440	500	630	680	680	680
13	440	500	630	680	680	680
14	530	620	770	870	890	890
15	570	670	830	950	980	1100
16	620	730	900	1050	1100	1400
18	720	840	1050	1220	1350	1600
20	820	950	1200	1400	1600	1800
25	1100	1400	1600	1800	2000	2400
28	1300	1600	1900	2100	2350	2700
30	1450	1700	2050	2300	2570	2950
32	1600	1800	2200	2500	2800	3200
36	2000	2100	2550	2950	3250	3650
40		2400	2900	3400	3700	4300
45		2750	3350	3950	4350	5050
50		3100	3800	4500	5000	5800
55		3450	4150	5300	6050	6500
63		4000	5200	5800	6700	7700
70			6300	6450	7650	9000
80				7900	9000	10000
100				10000	10000	

Table16 Manufacturing limit lengths of precision Ball Screws (DIN standard compliant Ball Screws)

Unit: mm

Shaft diameter	Ground shaft			CES shaft			
	C3	C5	C7	Cp3	Cp5	Ct5	Ct7
16	1050	1100	1400	1050	1100	1100	1400
20	1400	1600	1800	1400	1600	1600	1800
25	1800	2000	2400	1800	2000	2000	2400
32	2500	2800	3200	2500	2800	2800	3200
40	3400	3700	4300	3400	3700	3700	4300
50	4500	5000	5800	—	—	—	—
63	5800	6700	7700	—	—	—	—

Table17 Maximum Length of the Rolled Ball Screw by Accuracy Grade

Unit: mm

Screw shaft outer diameter	Overall screw shaft length		
	C7	C8	C10
6 to 8	320	320	—
10 to 12	500	1000	—
14 to 15	1500	1500	1500
16 to 18	1500	1800	1800
20	2000	2200	2200
25	2000	3000	3000
28	3000	3000	3000
30	3000	3000	4000
32 to 36	3000	4000	4000
40	3000	5000	5000
45	3000	5500	5500
50	3000	6000	6000

Standard Combinations of Shaft Diameter and Lead for the Precision Ball Screw

Table18 shows standard combinations of shaft diameters and leads of precision Ball Screws, and Table19 shows standard combinations of shaft diameters and leads of precision Ball Screws compliant with DIN standard.
If a Ball Screw not covered by the table is required,contact THK.

Table18 Standard Combinations of Screw Shaft and Lead (Precision Ball Screw) Unit: mm

Screw shaft outer diameter	Lead																					
	1	2	4	5	6	8	10	12	15	16	20	24	25	30	32	36	40	50	60	80	90	100
4	●																					
5	●																					
6	●																					
8	●	●					●	○														
10		●	●				●		○													
12		●		●		●																
13											○											
14		●	●	●		●																
15							●				●			○			○					
16			○	●	○		○			●												
18							●															
20			○	●	○	○	●	○			●						○		○			
25			○	●	○	○	●	○		○	●		○					○				
28				○	●	○	○															
30																			○		○	
32			○	●	●	○	●	○			○				○							
36					○	○	●	○		○	○	○				○						
40				○	○	○	●	●		○	○			○			○			○		
45					○	○	○	○		○	○											
50				○		○	●	○		○	○			○		○		○				○
55							○	○		○	○			○		○						
63							○	○		○	○											
70							○	○			○											
80							○	○			○											
100											○											

●: off-the-shelf products [standard-stock products equipped with the standardized screw shafts (with unfinished shaft ends/finished shaft ends)]
○: Semi-standard stock

Table19 Standard combinations of outer diameters and leads of the screw shafts (DIN standard compliant Ball Screws)
Unit: mm

Shaft diameter	Lead		
	5	10	20
16	●	—	—
20	●	—	—
25	●	●	—
32	●	●	—
40	○	●	○*
50	—	○	○*
63	—	○	○*

●: Ground shaft, CES shaft ○: Ground shaft only ＊: Model EB (no preload) only

Standard Combinations of Shaft Diameter and Lead for the Rolled Ball Screw

Table20 shows the standard combinations of shaft diameter and lead for the rolled Ball Screw.

Table20 Standard Combinations of Screw Shaft and Lead (Rolled Ball Screw) Unit: mm

Screw shaft outer diameter	Lead																			
	1	2	4	5	6	8	10	12	16	20	24	25	30	32	36	40	50	60	80	100
6	●																			
8		●																		
10		●			○															
12		●				○														
14			●	●																
15							●			●			●							
16				●					●											
18						●														
20				●			●			●						●				
25				●			●					●					●			
28					●															
30																		●		
32							●							●						
36							●			●	●				●					
40							●									●			●	
45								●												
50									●								●			●

●: Standard stock
○: Semi-standard stock

Permissible Axial Load

[Buckling Load on the Screw Shaft]

With the Ball Screw, it is necessary to select a screw shaft so that it will not buckle when the maximum compressive load is applied in the axial direction.
Fig.8 on A15-35 shows the relationship between the screw shaft diameter and a buckling load.
If determining a buckling load by calculation, it can be obtained from the equation (6) below. Note that in this equation, a safety factor of 0.5 is multiplied to the result.

$$P_1 = \frac{\eta_1 \cdot \pi^2 \cdot E \cdot I}{\ell_a^2} 0.5 = \eta_2 \frac{d_1^4}{\ell_a^2} 10^4 \quad \cdots\cdots\cdots(6)$$

P_1 : Buckling load (N)
ℓ_a : Distance between two mounting surfaces (mm)
E : Young's modulus (2.06×10^5 N/mm^2)
I : Minimum geometrical moment of inertia of the shaft (mm^4)

$I = \frac{\pi}{64} d_1^4$ d_1: screw-shaft thread minor diameter (mm)

η_1, η_2=Factor according to the mounting method

Fixed - free	η_1=0.25	η_2=1.3
Fixed - supported	η_1=2	η_2=10
Fixed - fixed	η_1=4	η_2=20

[Permissible Tensile Compressive Load on the Screw Shaft]

If an axial load is applied to the Ball Screw, it is necessary to take into account not only the buckling load but also the permissible tensile compressive load in relation to the yielding stress on the screw shaft.
The permissible tensile compressive load is obtained from the equation (7).

$$P_2 = \sigma \frac{\pi}{4} d_1^2 = 116 d_1^2 \quad \cdots\cdots\cdots(7)$$

P_2 : Permissible tensile compressive load (N)
σ : Permissible tensile compressive stress (147 MPa)
d_1 : Screw-shaft thread minor diameter (mm)

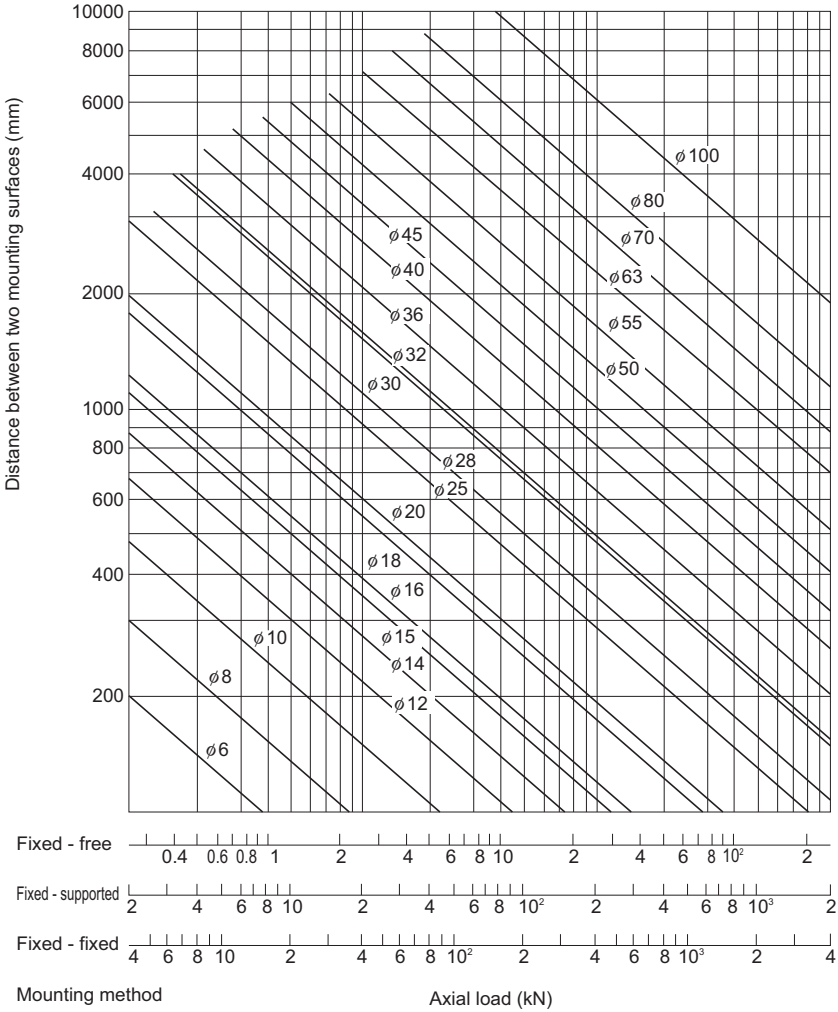

Fig.8 Permissible Tensile Compressive Load Diagram

Permissible Rotational Speed

[Dangerous Speed of the Screw Shaft]

When the rotational speed reaches a high magnitude, the Ball Screw may resonate and eventually become unable to operate due to the screw shaft's natural frequency. Therefore, it is necessary to select a model so that it is used below the resonance point (dangerous speed).
Fig.9 on A15-38 shows the relationship between the screw shaft diameter and a dangerous speed.
If determining a dangerous speed by calculation, it can be obtained from the equation (8) below. Note that in this equation, a safety factor of 0.8 is multiplied to the result.

$$N_1 = \frac{60 \cdot \lambda_1^2}{2\pi \cdot \ell_b^2} \times \sqrt{\frac{E \times 10^3 \cdot I}{\gamma \cdot A}} \times 0.8 = \lambda_2 \cdot \frac{d_1}{\ell_b^2} \cdot 10^7 \quad \cdots\cdots\cdots(8)$$

N_1 : Permissible rotational speed determined by dangerous speed (min^{-1})
ℓ_b : Distance between two mounting surfaces (mm)
E : Young's modulus (2.06×10^5 N/mm^2)
I : Minimum geometrical moment of inertia of the shaft (mm^4)

$I = \frac{\pi}{64} d_1^4$ d_1: screw-shaft thread minor diameter (mm)

γ : Density (specific gravity) (7.85×10^{-6} kg/mm^3)
A : Screw shaft cross-sectional area (mm^2)

$A = \frac{\pi}{4} d_1^2$

λ_1, λ_2 : Factor according to the mounting method

Fixed - free	λ_1=1.875	λ_2=3.4
Supported - supported	λ_1=3.142	λ_2=9.7
Fixed - supported	λ_1=3.927	λ_2=15.1
Fixed - fixed	λ_1=4.73	λ_2=21.9

[DN Value]

The permissible rotational speed of the Ball Screw must be obtained from the dangerous speed of the screw shaft and the DN value.

The permissible rotational speed determined by the DN value is obtained using the equations (9) to (15) below.

● **Ball Screw with Ball Cage**

■Models SBN and HBN

$$N_2 = \frac{130000}{D} \quad \cdots\cdots\cdots(9)$$

N_2 : Permissible rotational speed determined by the DN value (min^{-1}(rpm))

D : Ball center-to-center diameter
(indicated in the specification tables of the respective model number)

■Model SBK

$$N_2 = \frac{210000}{D} \quad \cdots\cdots\cdots(10)$$ SBK3636, SBK4040 or SBK5050

$$N_2 = \frac{160000}{D} \quad \cdots\cdots\cdots(11)$$

● **Precision Ball Screw (DIN Standard Compliant Ball Screw)**

$$N_2 = \frac{100000}{D} \quad \cdots\cdots\cdots(12)$$

● **Precision Ball Screw**

$$N_2 = \frac{70000}{D} \quad \cdots\cdots\cdots(13)$$

● **Rolled Ball Screw**
(excluding large lead type)

$$N_2 = \frac{50000}{D} \quad \cdots\cdots\cdots(14)$$

● **Large-Lead Rolled Ball Screw**

$$N_2 = \frac{70000}{D} \quad \cdots\cdots\cdots(15)$$

Of the permissible rotational speed determined by dangerous speed (N_1) and the permissible rotational speed determined by DN value (N_2), the lower rotational speed is regarded as the permissible rotational speed.

If the working rotational speed exceeds N_2, a high-speed type Ball Screw is available. Contact THK for details.

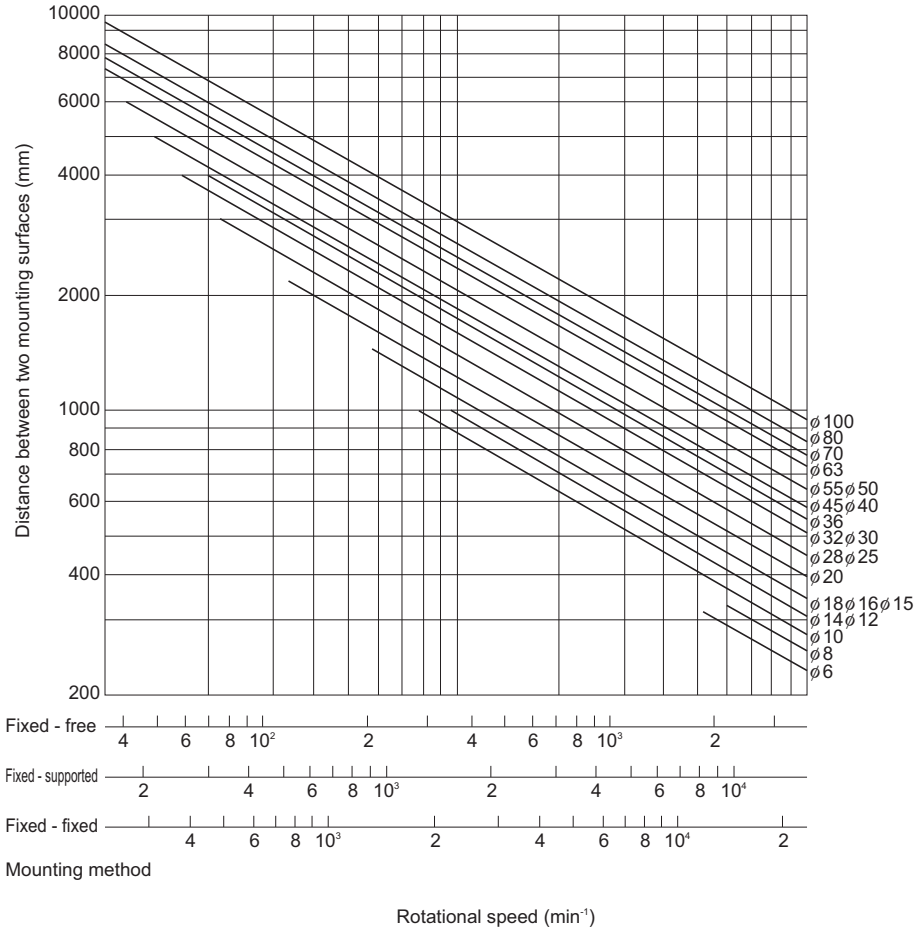

Fig.9 Permissible Rotational Speed Diagram

Selecting a Nut

Types of Nuts

The nuts of the Ball Screws are categorized by the ball circulation method into the return-pipe type, the deflector type and end the cap type. These three nut types are described as follows.
In addition to the circulation methods, the Ball Screws are categorized also by the preloading method.

[Types by Ball Circulation Method]

- **Return-pipe Type (Models SBN, BNF, BNT, BNFN, BIF and BTK) Return-piece Type (Model HBN)**

These are most common types of nuts that use a return pipe for ball circulation. The return pipe allows balls to be picked up, pass through the pipe, and return to their original positions to complete infinite motion.

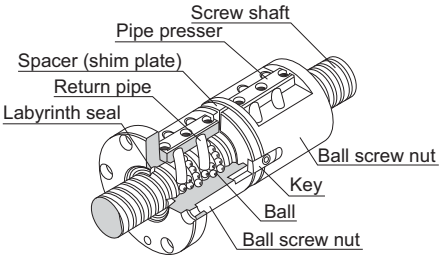

Example of Structure of Return-Pipe Nut

- **Deflector Type (Models DK, DKN, DIK, JPF and DIR)**

These are the most compact type of nut. The balls change their traveling direction with a deflector, pass over the circumference of the screw shaft, and return to their original positions to complete an infinite motion.

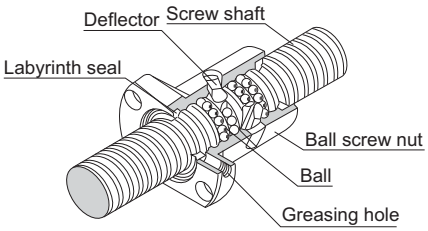

Example of Structure of Simple Nut

- **End-cap Type: Large lead Nut (Models SBK, BLK, WGF, BLW, WTF, CNF and BLR)**

These nuts are most suitable for the fast feed. The balls are picked up with an end cap, pass through the through hole of the nut, and return to their original positions to complete an infinite motion.

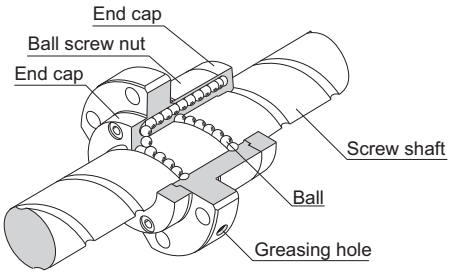

Example of Structure of Large lead Nut

[Types by Preloading Method]

● **Fixed-point Preloading**

■Double-nut Preload (Models BNFN, DKN and BLW)

A spacer is inserted between two nuts to provide a preload.

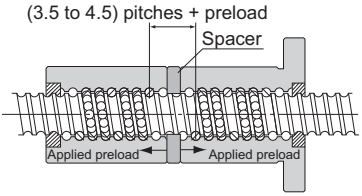

Model BNFN

Model DKN

Model BLW

■Offset Preload (Models SBN, BIF, DIK, SBK and DIR)

More compact than the double-nut method, the offset preloading provides a preload by changing the groove pitch of the nut without using a spacer.

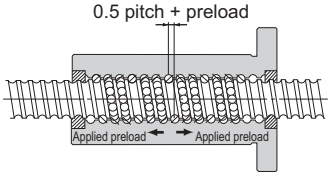

Model SBN

Model BIF

Model DIK

Model SBK

Model DIR

● Constant Pressure Preloading (Model JPF)

With this method, a spring structure is installed almost in the middle of the nut, and it provides a preload by changing the groove pitch in the middle of the nut.

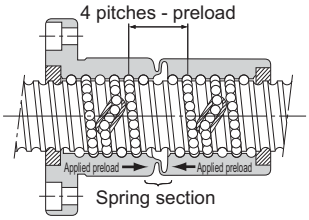

Model JPF

Selecting a Model Number

Calculating the Axial Load

[In Horizontal Mount]

With ordinary conveyance systems, the axial load (Fa_n) applied when horizontally reciprocating the work is obtained in the equation below.

$$Fa_1 = \mu \cdot mg + f + m\alpha \quad \cdots\cdots (16)$$

$$Fa_2 = \mu \cdot mg + f \quad \cdots\cdots (17)$$

$$Fa_3 = \mu \cdot mg + f - m\alpha \quad \cdots\cdots (18)$$

$$Fa_4 = -\mu \cdot mg - f - m\alpha \quad \cdots\cdots (19)$$

$$Fa_5 = -\mu \cdot mg - f \quad \cdots\cdots (20)$$

$$Fa_6 = -\mu \cdot mg - f + m\alpha \quad \cdots\cdots (21)$$

V_{max} : Maximum speed (m/s)
t_1 : Acceleration time (m/s)

$\alpha = \dfrac{V_{max}}{t_1}$: Acceleration (m/s²)

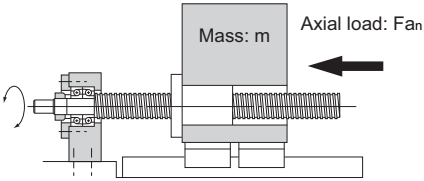

Guide surface
Friction coefficient : μ
Resistance without load : f
Gravitational acceleration: g

Fa_1 : Axial load during forward acceleration (N)
Fa_2 : Axial load during forward uniform motion (N)
Fa_3 : Axial load during forward deceleration (N)
Fa_4 : Axial load during backward acceleration (N)
Fa_5 : Axial load during uniform backward motion (N)
Fa_6 : Axial load during backward deceleration (N)
m : Transferred mass (kg)
μ : Frictional coefficient of the guide surface (–)
f : Guide surface resistance (without load) (N)

[In Vertical Mount]

With ordinary conveyance systems, the axial load (Fa_n) applied when vertically reciprocating the work is obtained in the equation below.

$$Fa_1 = mg + f + m\alpha \quad \cdots\cdots (22)$$

$$Fa_2 = mg + f \quad \cdots\cdots (23)$$

$$Fa_3 = mg + f - m\alpha \quad \cdots\cdots (24)$$

$$Fa_4 = mg - f - m\alpha \quad \cdots\cdots (25)$$

$$Fa_5 = mg - f \quad \cdots\cdots (26)$$

$$Fa_6 = mg - f + m\alpha \quad \cdots\cdots (27)$$

V_{max} : Maximum speed (m/s)
t_1 : Acceleration time (m/s)

$\alpha = \dfrac{V_{max}}{t_1}$: Acceleration (m/s²)

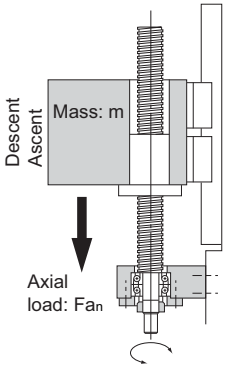

Guide surface
Friction coefficient : μ
Resistance without load: f

Fa_1 : Axial load during upward acceleration (N)
Fa_2 : Axial load during uniform upward motion (N)
Fa_3 : Axial load during upward deceleration (N)
Fa_4 : Axial load during downward acceleration (N)
Fa_5 : Axial load during uniform downward motion (N)
Fa_6 : Axial load during downward deceleration (N)
m : Transferred mass (kg)
f : Guide surface resistance (without load) (N)

Static Safety Factor

The basic static load rating (C_0a) generally equals to the permissible axial load of a Ball Screw. Depending on the conditions, it is necessary to take into account the following static safety factor against the calculated load. When the Ball Screw is stationary or in motion, unexpected external force may be applied through an inertia caused by the impact or the start and stop.

$$Fa_{max} = \frac{C_0a}{f_s} \quad \cdots\cdots\cdots(28)$$

Fa_{max} : Allowable Axial Load (kN)
C_0a : Basic static load rating* (kN)
f_s : Static safety factor (see Table21)

Table21 Static Safety Factor (f_s)

Machine using the LM system	Load conditions	Lower limit of f_s
General industrial machinery	Without vibration or impact	1.0 to 3.5
	With vibration or impact	2.0 to 5.0
Machine tool	Without vibration or impact	1.0 to 4.0
	With vibration or impact	2.5 to 7.0

The basic static load rating (C_0a) is a static load with a constant direction and magnitude whereby the sum of the permanent deformation of the rolling element and that of the raceway on the contact area under the maximum stress is 0.0001 times the rolling element diameter. With the Ball Screw, it is defined as the axial load. (Specific values of each Ball Screw model are indicated in the specification tables for the corresponding model number.)

[Permissible Load Safety Margin (HBN)]

High-load Ball Screw model HBN is designed to achieve a long service life under high loading conditions. For axial load it is necessary to consider the permissible axial load, Fp, which is the maximum axial load that the High-load Ball Screw can receive.

$$\frac{Fp}{Fa} > 1 \quad \cdots\cdots\cdots(29)$$

Fp : Permissible Axial Load (kN)
Fa : Applied Axial Load (kN)

Studying the Service Life

[Service Life of the Ball Screw]

The Ball Screw in motion under an external load receives repeated stress on its raceways and balls. When the stress reaches the limit, the raceways break from fatigue and their surfaces flakes like scales. This phenomenon is called flaking. The service life of the Ball Screw is the total number of revolutions until the first flaking occurs on any of the raceways or the balls as a result of rolling fatigue of the material.

The service life of the Ball Screw varies from unit to unit even if they are manufactured in the same process and used in the same operating conditions. For this reason, when determining the service life of a Ball Screw unit, the nominal life as defined below is used as a guideline.

The nominal life is the total number of revolutions that 90% of identical Ball Screw units in a group achieve without developing flaking (scale-like pieces of a metal surface) after they independently operate in the same conditions.

[Calculating the Rated Life]

The service life of the Ball Screw is calculated from the equation (30) below using the basic dynamic load rating (Ca) and the applied axial load.

- **Nominal Life (Total Number of Revolutions)**

$$L = \left(\frac{C_a}{f_w \cdot F_a}\right)^3 \times 10^6 \quad \cdots\cdots\cdots(30)$$

L : Nominal life (total number of revolutions) (rev)
Ca : Basic dynamic load rating* (N)
Fa : Applied axial load (N)
f_w : Load factor (see Table22)

Table22 Load Factor (f_w)

Vibrations/ impact	Speed(V)	f_w
Faint	Very low V≦0.25m/s	1 to 1.2
Weak	Slow 0.25<V≦1m/s	1.2 to 1.5
Medium	Medium 1<V≦2m/s	1.5 to 2
Strong	High V>2m/s	2 to 3.5

* The basic dynamic load rating (Ca) is used in calculating the service life when a Ball Screw operates under a load. The basic dynamic load rating is a load with interlocked direction and magnitude under which the nominal life (L) equals to 10^6rev. when a group of the same Ball Screw units independently operate. (Specific basic dynamic load ratings (Ca) are indicated in the specification tables of the corresponding model numbers.)

* The rated service life is estimated by calculating the load on the premise that the product is set up in ideal mounting conditions with the assurance of good lubrication. The service life can be affected by the precision of the mounting materials used and any distortion.

● Service Life Time

If the revolutions per minute is determined, the service life time can be calculated from the equation (31) below using the nominal life (L).

$$L_h = \frac{L}{60 \times N} = \frac{L \times Ph}{2 \times 60 \times n \times \ell_s} \quad \cdots\cdots\cdots(31)$$

L_h	: Service life time	(h)
N	: Revolutions per minute	(min^{-1})
n	: Number of reciprocations per minute	(min^{-1})
Ph	: Ball Screw lead	(mm)
ℓ_s	: Stroke length	(mm)

● Service Life in Travel Distance

The service life in travel distance can be calculated from the equation (32) below using the nominal life (L) and the Ball Screw lead.

$$L_s = \frac{L \times Ph}{10^6} \quad \cdots\cdots\cdots(32)$$

L_s	: Service Life in Travel Distance	(km)
Ph	: Ball Screw lead	(mm)

● Applied Load and Service Life with a Preload Taken into Account

If the Ball Screw is used under a preload (medium preload), it is necessary to consider the applied preload in calculating the service life since the ball screw nut already receives an internal load. For details on applied preload for a specific model number, contact THK.

● Average Axial Load

If an axial load acting on the Ball Screw is present, it is necessary to calculate the service life by determining the average axial load.
The average axial load (F_m) is a constant load that equals to the service life in fluctuating the load conditions.
If the load changes in steps, the average axial load can be obtained from the equation below.

$$F_m = \sqrt[3]{\frac{1}{\ell}(Fa_1^3 \ell_1 + Fa_2^3 \ell_2 + \cdots + Fa_n^3 \ell_n)} \quad \cdots\cdots\cdots(33)$$

F_m	: Average Axial Load	(N)
Fa_n	: Varying load	(N)
ℓ_n	: Distance traveled under load (F_n)	
ℓ	: Total travel distance	

To determine the average axial load using a rotational speed and time, instead of a distance, calculate the average axial load by determining the distance in the equation below.

$\ell = \ell_1 + \ell_2 + \cdots \ell_n$

$\ell_1 = N_1 \cdot t_1$

$\ell_2 = N_2 \cdot t_2$

$\ell_n = N_n \cdot t_n$

N: Rotational speed

t: Time

■When the Applied Load Sign Changes

If the sign (positive or negative) used for variable load is always the same, there are no problems with formula (33). However, if the variable load sign changes depending on the type of operation, calculate the average axial load for either positive or negative load, allowing for the load direction. (If the average axial load for positive load is calculated, the negative load is taken to be zero.) The larger of the two average axial loads is taken as the average axial load when the service life is calculated.

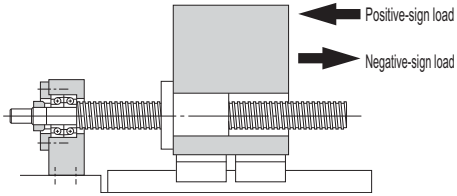

Example: Calculate the average axial load with the following load conditions.

Operation No.	Varying load Fa_n(N)	Travel distance ℓ_n(mm)
No.1	10	10
No.2	50	50
No.3	−40	10
No.4	−10	70

The subscripts of the fluctuating load symbol and the travel distance symbol indicate operation numbers.

● Average axial load of positive-sign load

To calculate the average axial load of the positive-sign load, assume Fa_3 and Fa_4 to be zero.

$$F_{m1} = \sqrt[3]{\frac{Fa_1^3 \times \ell_1 + Fa_2^3 \times \ell_2}{\ell_1 + \ell_2 + \ell_3 + \ell_4}} = 35.5\text{N}$$

● Average axial load of negative-sign load

To calculate the average axial load of the negative-sign load, assume Fa_1 and Fa_2 to be zero.

$$F_{m2} = \sqrt[3]{\frac{|Fa_3|^3 \times \ell_3 + |Fa_4|^3 \times \ell_4}{\ell_1 + \ell_2 + \ell_3 + \ell_4}} = 17.2\text{N}$$

Accordingly, the average axial load of the positive-sign load (F_{m1}) is adopted as the average axial load (F_m) for calculating the service life.

Studying the Rigidity

To increase the positioning accuracy of feed screws in NC machine tools or the precision machines, or to reduce the displacement caused by the cutting force, it is necessary to design the rigidity of the components in a well-balanced manner.

Axial Rigidity of the Feed Screw System

When the axial rigidity of a feed screw system is K, the elastic displacement in the axial direction can be obtained using the equation (34) below.

$$\delta = \frac{Fa}{K} \quad \cdots\cdots\cdots(34)$$

δ : Elastic displacement of a feed screw system in the axial direction (μm)
Fa : Applied axial load (N)

The axial rigidity (K) of the feed screw system is obtained using the equation (35) below.

$$\frac{1}{K} = \frac{1}{K_S} + \frac{1}{K_N} + \frac{1}{K_B} + \frac{1}{K_H} \quad \cdots\cdots\cdots(35)$$

K : Axial Rigidity of the Feed Screw System (N/μm)
K_S : Axial rigidity of the screw shaft (N/μm)
K_N : Axial rigidity of the nut (N/μm)
K_B : Axial rigidity of the support bearing (N/μm)
K_H : Rigidity of the nut bracket and the support bearing bracket (N/μm)

[Axial rigidity of the screw shaft]
The axial rigidity of a screw shaft varies depending on the method for mounting the shaft.

● **For Fixed-Supported (or -Free) Configuration**

$$K_S = \frac{A \cdot E}{1000 \cdot L} \quad \cdots\cdots\cdots(36)$$

A : Screw shaft cross-sectional area (mm^2)

$$A = \frac{\pi}{4} d_1^2$$

d_1 : Screw-shaft thread minor diameter (mm)
E : Young's modulus (2.06×10^5 N/mm^2)
L : Distance between two mounting surfaces (mm)

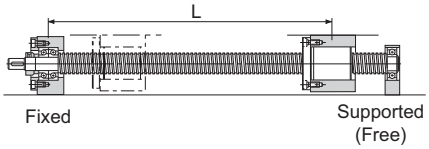

Fig.10 on A15-48 shows an axial rigidity diagram for the screw shaft.

● **For Fixed-Fixed Configuration**

$$K_s = \frac{A \cdot E \cdot L}{1000 \cdot a \cdot b} \quad \cdots\cdots\cdots(37)$$

K_s becomes the lowest and the elastic displacement in the axial direction is the greatest at the position of $a = b = \frac{L}{2}$.

$$K_s = \frac{4A \cdot E}{1000L}$$

Fig.11 on A15-49 shows an axial rigidity diagram of the screw shaft in this configuration.

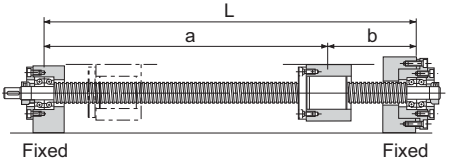

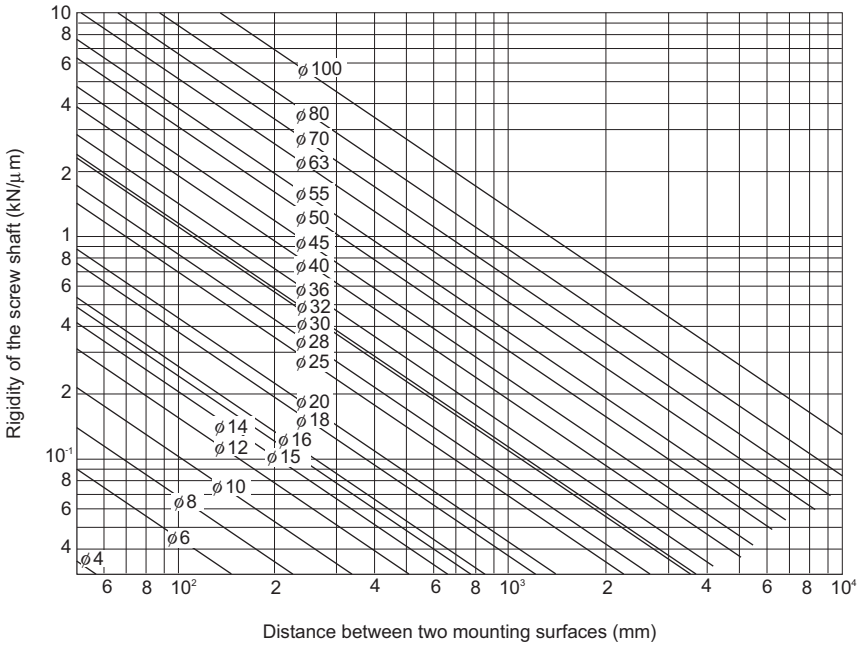

Fig.10 Axial Rigidity of the Screw Shaft (Fixed-Free, Fixed-Supported)

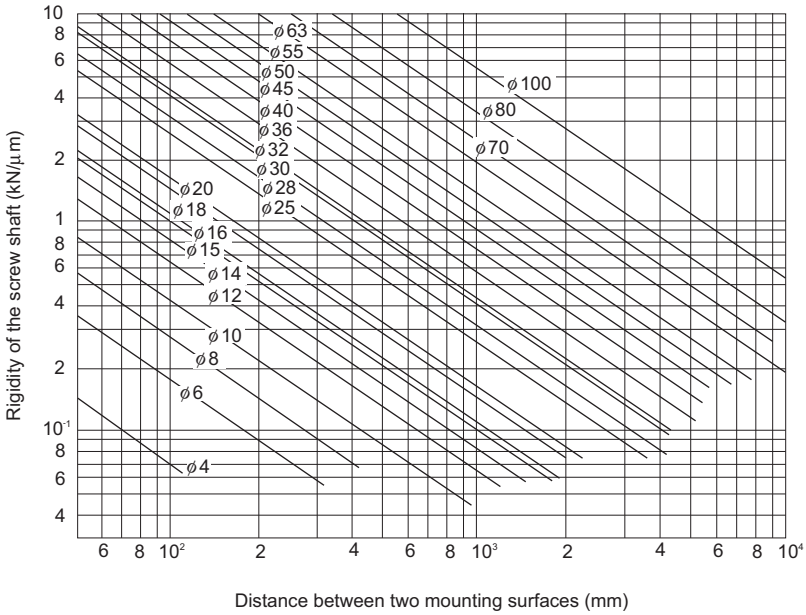

Fig.11 Axial Rigidity of the Screw Shaft (Fixed-Fixed)

[Axial rigidity of the nut]

The axial rigidity of the nut varies widely with preloads.

● No Preload Type

The logical rigidity in the axial direction when an axial load accounting for 30% of the basic dynamic load rating (Ca) is applied is indicated in the specification tables of the corresponding model number. This value does not include the rigidity of the components related to the nut-mounting bracket. In general, set the rigidity at roughly 80% of the value in the table.

The rigidity when the applied axial load is not 30% of the basic dynamic load rating (Ca) is calculated using the equation (38) below.

$$K_N = K\left(\frac{Fa}{0.3Ca}\right)^{\frac{1}{3}} \times 0.8 \quad \cdots\cdots\cdots(38)$$

K_N	: Axial rigidity of the nut	(N/μm)
K	: Rigidity value in the specification tables	(N/μm)
Fa	: Applied axial load	(N)
Ca	: Basic dynamic load rating	(N)

● **Preload Type**

The logical rigidity in the axial direction when an axial load accounting for 10% of the basic dynamic load rating (Ca) is applied is indicated in the dimensional table of the corresponding model number. This value does not include the rigidity of the components related to the nut-mounting bracket. In general, generally set the rigidity at roughly 80% of the value in the table.

The rigidity when the applied preload is not 10% of the basic dynamic load rating (Ca) is calculated using the equation (39) below.

$$K_N = K\left(\frac{Fa_0}{0.1Ca}\right)^{\frac{1}{3}} \times 0.8 \quad \cdots\cdots\cdots(39)$$

K_N	: Axial rigidity of the nut	(N/μm)
K	: Rigidity value in the specification tables	(N/μm)
Fa_0	: Applied preload	(N)
Ca	: Basic dynamic load rating	(N)

[Axial rigidity of the support bearing]

The rigidity of the Ball Screw support bearing varies depending on the support bearing used.

The calculation of the rigidity with a representative angular contact ball bearing is shown in the equation (40) below.

$$K_B \fallingdotseq \frac{3Fa_0}{\delta a_0} \quad \cdots\cdots\cdots(40)$$

K_B	: Axial rigidity of the support bearing	(N/μm)
Fa_0	: Applied preload of the support bearing	(N)
δa_0	: Axial displacements	(μm)

$$\delta a_0 = \frac{0.45}{\sin\alpha}\left(\frac{Q^2}{Da}\right)^{\frac{1}{3}}$$

$$Q = \frac{Fa_0}{Z\sin\alpha}$$

Q	: Axial load	(N)
Da	: Ball diameter of the support bearing	(mm)
α	: Initial contact angle of the support bearing	(°)
Z	: Number of balls	

For details of a specific support bearing, contact its manufacturer.

[Axial Rigidity of the Nut Bracket and the Support Bearing Bracket]

Take this factor into consideration when designing your machine. Set the rigidity as high as possible.

Studying the Positioning Accuracy

Causes of Error in the Positioning Accuracy

The causes of error in the positioning accuracy include the lead angle accuracy, the axial clearance and the axial rigidity of the feed screw system. Other important factors include the thermal displacement from heat and the orientation change of the guide system during traveling.

Studying the Lead Angle Accuracy

It is necessary to select the correct accuracy grade of the Ball Screw that satisfies the required positioning accuracy from the Ball Screw accuracies (Table1 on A15-18). Table23 on A15-52 shows examples of selecting the accuracy grades by the application.

Studying the Axial Clearance

The axial clearance is not a factor of positioning accuracy in single-directional feed. However, it will cause a backlash when the feed direction is inversed or the axial load is inversed. Select an axial clearance that meets the required backlash from Table10 and Table13 on A15-25.

Table23 Examples of Selecting Accuracy Grades by Application

Applications		Shaft	Accuracy grades							
			C0	C1	C2	C3	C5	C7	C8	C10
NC machine tools	Lathe	X		●	●	●	●			
		Z				●	●			
	Machining center	XY			●	●	●			
		Z			●	●	●			
	Drilling machine	XY				●	●			
		Z					●	●		
	Jig borer	XY	●	●						
		Z	●	●						
	Surface grinder	X				●	●			
		Y		●	●	●	●			
		Z		●	●	●	●			
	Cylindrical grinder	X	●	●	●					
		Z		●	●	●				
	Electric discharge machine	XY	●	●	●					
		Z		●	●	●	●			
	Electric discharge machine Wire cutting machine	XY	●	●	●					
		Z	●	●	●	●				
		UV		●	●	●				
	Punching press	XY				●	●	●		
	Laser beam machine	X				●	●	●		
		Z				●	●	●		
	Woodworking machine						●	●	●	●
General-purpose machine; dedicated machine						●	●	●	●	●
Industrial robot	Cartesian coordinate	Assembly				●	●	●	●	
		Other					●	●	●	●
	Vertical articulated type	Assembly					●	●	●	
		Other						●	●	
	Cylindrical coordinate					●	●	●		
Semiconductor manufacturing machine	Photolithography machine		●	●						
	Chemical treatment machine				●	●	●	●	●	●
	Wire bonding machine			●	●					
	Prober		●	●	●	●				
	Printed circuit board drilling machine			●	●	●	●	●		
	Electronic component inserter				●	●	●	●		
3D measuring instrument			●	●	●					
Image processing machine			●	●	●					
Injection molding machine								●	●	●
Office equipment							●	●	●	●

Studying the Axial Clearance of the Feed Screw System

Of the axial rigidities of the feed screw system, the axial rigidity of the screw shaft fluctuates according to the stroke position. When the axial rigidity is large, such change in the axial rigidity of the screw shaft will affect the positioning accuracy. Therefore, it is necessary to take into account the rigidity of the feed screw system (A15-47 to A15-50).

Example: Positioning error due to the axial rigidity of the feed screw system during a vertical transfer

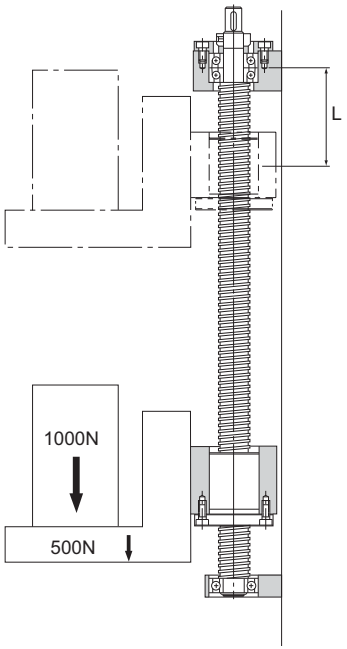

[Conditions]
Transferred weight: 1,000 N; table weight: 500 N
Ball Screw used: model BNF2512–2.5 (screw-shaft thread minor diameter d_1 = 21.9 mm)
Stroke length: 600 mm (L=100 mm to 700 mm)
Screw shaft mounting type: fixed-supported

[Consideration]
The difference in axial rigidity between L = 100 mm and L = 700 mm applied only to the axial rigidity of the screw shaft.
Therefore, positioning error due to the axial rigidity of the feed screw system equals to the difference in the axial displacement of the screw shaft between L = 100 mm and L = 700 mm.

[Axial Rigidity of the Screw Shaft (see A15-47 and A15-48)]

$$K_S = \frac{A \cdot E}{1000L} = \frac{376.5 \times 2.06 \times 10^5}{1000 \times L} = \frac{77.6 \times 10^3}{L}$$

$$A = \frac{\pi}{4} d_1^2 = \frac{\pi}{4} \times 21.9^2 = 376.5\text{mm}^2$$

$$E = 2.06 \times 10^5 \text{ N/mm}^2$$

(1) When L = 100 mm

$$K_{S1} = \frac{77.6 \times 10^3}{100} = 776 \text{ N/}\mu\text{m}$$

(2) When L = 700mm

$$K_{S2} = \frac{77.6 \times 10^3}{700} = 111 \text{ N/}\mu\text{m}$$

[Axial Displacement due to Axial Rigidity of the Screw Shaft]

(1) When L = 100 mm

$$\delta_1 = \frac{Fa}{K_{S1}} = \frac{1000+500}{776} = 1.9\mu\text{m}$$

(2) When L = 700mm

$$\delta_2 = \frac{Fa}{K_{S2}} = \frac{1000+500}{111} = 13.5\mu\text{m}$$

[Positioning Error due to Axial Rigidity of the Feed Screw System]

Positioning accuracy$=\delta_1-\delta_2=1.9-13.5$

$=-11.6\mu\text{m}$

Therefore, the positioning error due to the axial rigidity of the feed screw system is 11.6 μm.

Studying the Thermal Displacement through Heat Generation

If the temperature of the screw shaft increases during operation, the screw shaft is elongated due to heat thereby to lower the positioning accuracy. The expansion and contraction of the screw shaft is calculated using the equation (41) below.

$$\Delta \ell = \rho \times \Delta t \times \ell \quad \cdots\cdots\cdots (41)$$

$\Delta \ell$: Axial expansion/contraction of the screw shaft (mm)
ρ : Thermal expansion coefficient (12×10^{-6}/℃)
Δt : Temperature change in the screw shaft (℃)
ℓ : Effective thread length (mm)

Thus, if the temperature of the screw shaft increases by 1℃, the screw shaft is elongated by 12 μm per meter. Therefore, as the Ball Screw travels faster, the more heat is generated. So, as the temperature increases, the positioning accuracy lowers. Accordingly, if high accuracy is required, it is necessary to take measures to cope with the temperature increase.

[Measures to Cope with the Temperature Rise]

- **Minimize the Heat Generation**
- Minimize the preloads on the Ball Screw and the support bearing.
- Increase the Ball Screw lead and reduce the rotational speed.
- Select a correct lubricant. (See Accessories for Lubrication on A24-2.)
- Cool the circumference of the screw shaft with a lubricant or air.

- **Avoid Effect of Temperature Rise through Heat Generation**
- Set a negative target value for the reference travel distance of the Ball Screw.
  Generally, set a negative target value for the reference travel distance assuming a temperature increase of 2℃ to 5℃ by heat.
  (−0.02mm to −0.06 mm/m)
- Preload the shaft screw with tension. (See Fig.3 of the structure on A15-175.)

Studying the Orientation Change during Traveling

The lead angle accuracy of the Ball Screw equals the positioning accuracy of the shaft center of the Ball Screw. Normally, the point where the highest positioning accuracy is required changes according to the ball screw center and the vertical or horizontal direction. Therefore, the orientation change during traveling affects the positioning accuracy.
The largest factor of orientation change affecting the positioning accuracy is pitching if the change occurs in the ball screw center and the vertical direction, and yawing if the change occurs in the horizontal direction.
Accordingly, it is necessary to study the orientation change (accuracy in pitching, yawing, etc.) during the traveling on the basis of the distance from the ball screw center to the location where positioning accuracy is required.
Positioning error due to pitching and yawing is obtained using the equation (42) below.

$$A = \ell \times \sin\theta \quad \cdots\cdots\cdots (42)$$

A: Positioning accuracy due to pitching (or yawing) (mm)
ℓ : Vertical (or horizontal) distance from the ball screw center (mm) (see Fig.12)
θ : Pitching (or yawing) (°)

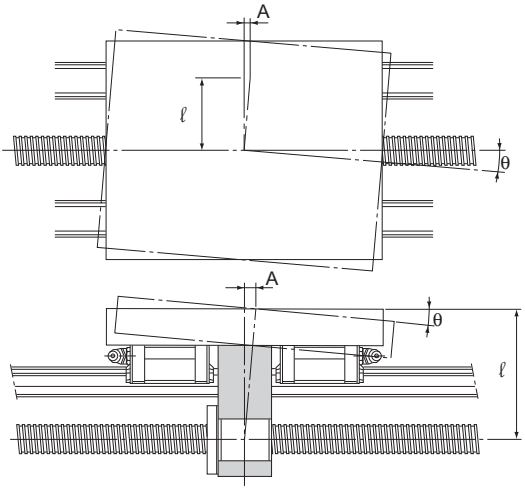

Fig.12

Studying the Rotational Torque

The rotational torque required to convert rotational motion of the Ball Screw into straight motion is obtained using the equation (43) below.

[During Uniform Motion]

$$T_t = T_1 + T_2 + T_4 \quad \cdots\cdots\cdots(43)$$

T_t : Rotational torque required during uniform motion (N-mm)
T_1 : Frictional torque due to an external load (N-mm)
T_2 : Preload torque of the Ball Screw (N-mm)
T_4 : Other torque (N-mm)
(frictional torque of the support bearing and oil seal)

[During Acceleration]

$$T_K = T_t + T_3 \quad \cdots\cdots\cdots(44)$$

T_K : Rotational torque required during acceleration (N-mm)
T_3 : Torque required for acceleration (N-mm)

[During Deceleration]

$$T_g = T_t - T_3 \quad \cdots\cdots\cdots(45)$$

T_g : Rotational torque required for deceleration (N-mm)

Frictional Torque Due to an External Load

Of the turning forces required for the Ball Screw, the rotational torque needed for an external load (guide surface resistance or external force) is obtained using the equation (46) below.

$$T_1 = \frac{Fa \cdot Ph}{2\pi \cdot \eta} \cdot A \quad \cdots\cdots\cdots(46)$$

T_1 : Frictional torque due to an external load (N-mm)
Fa : Applied axial load (N)
Ph : Ball Screw lead (mm)
η : Ball Screw efficiency (0.9 to 0.95)
A : Reduction ratio

Torque Due to a Preload on the Ball Screw

For a preload on the Ball Screw, see "Preload Torque" on A15-28.

$$T_2 = T_d \cdot A \quad \cdots\cdots\cdots(47)$$

T_2 : Preload torque of the Ball Screw (N-mm)
T_d : Preload torque of the Ball Screw (N-mm)
A : Reduction ratio

Torque Required for Acceleration

$$T_3 = J \times \omega' \times 10^3 \quad \cdots\cdots\cdots(48)$$

T_3 : Torque required for acceleration (N-mm)
J : Inertial moment ($kg \cdot m^2$)
ω' : Angular acceleration (rad/s^2)

$$J = m\left(\frac{Ph}{2\pi}\right)^2 \cdot A^2 \cdot 10^{-6} + J_S \cdot A^2 + J_A \cdot A^2 + J_B$$

m : Transferred mass (kg)
Ph : Ball Screw lead (mm)
J_S : Inertial moment of the screw shaft ($kg \cdot m^2$)
(indicated in the specification tables of the respective model number)
A : Reduction ratio
J_A : Inertial moment of gears, etc. attached to the screw shaft side ($kg \cdot m^2$)
J_B : Inertial moment of gears, etc. attached to the motor side d ($kg \cdot m^2$)

$$\omega' = \frac{2\pi \cdot Nm}{60t}$$

Nm : Motor revolutions per minute (min^{-1})
t : Acceleration time (s)

[Ref.] Inertial moment of a round object

$$J = \frac{m \cdot D^2}{8 \cdot 10^6}$$

J : Inertial moment ($kg \cdot m^2$)
m : Mass of a round object (kg)
D : Screw shaft outer diameter (mm)

Investigating the Terminal Strength of Ball Screw Shafts

When torque is conveyed through the screw shaft in a ball screw, the strength of the screw shaft must be taken into consideration since it experiences both torsion load and bending load.

[Screw shaft under torsion]

When torsion load is applied to the end of a ball screw shaft, use equation (49) to obtain the end diameter of the screw shaft.

$$T = \tau_a \cdot Z_P \quad \text{and} \quad Z_P = \frac{T}{\tau_a} \quad \cdots\cdots\cdots(49)$$

T : Maximum torsion moment (N-mm)

τ_a : Permissible torsion stress of the screw Shaft (49N/mm²)

Z_P : Section modulus (mm³)

$$Z_P = \frac{\pi \cdot d^3}{16}$$

T: Torsion moment

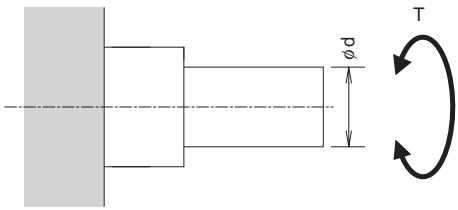

[Screw shaft under bending]

When bending load is applied to the end of a ball screw shaft, use equation (50) to obtain the end diameter of the screw shaft.

$$M = \sigma \cdot Z \quad \text{and} \quad Z = \frac{M}{\sigma} \quad \cdots\cdots\cdots(50)$$

M : Maximum bending moment (N-mm)

σ : Permissible bending stress of the screw shaft (98 N/mm²)

Z : Modulus section (mm³)

$$Z = \frac{\pi \cdot d^3}{32}$$

M: Bending moment

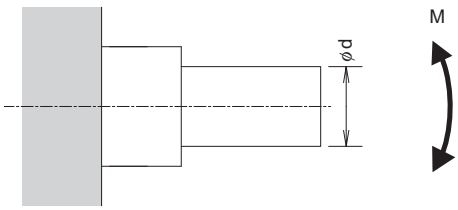

[If the shaft experiences both torsion and bending]

When torsion load and bending load are both applied simultaneously to the end of a ball screw shaft, calculate the diameter of the screw shaft separately for each, taking into consideration the corresponding bending moment (M_e) and the corresponding torsion moment (T_e). Then calculate the thickness of the screw shaft and use the largest of the values.

Equivalent bending moment

$$M_e = \frac{M + \sqrt{M^2 + T^2}}{2} = \frac{M}{2}\left\{1 + \sqrt{1 + \left(\frac{T}{M}\right)^2}\right\}$$

$M_e = \sigma \cdot Z$

Equivalent torsion moment

$$T_e = \sqrt{M^2 + T^2} = M \cdot \sqrt{1 + \left(\frac{T}{M}\right)^2}$$

$T_e = \tau_a \cdot Z_P$

Studying the Driving Motor

When selecting a driving motor required to rotate the Ball Screw, normally take into account the rotational speed, rotational torque and minimum feed amount.

When Using a Servomotor

[Rotational Speed]

The rotation speed required for the motor is obtained using the equation (51) based on the feed speed, Ball Screw lead and reduction ratio.

$$N_M = \frac{V \times 1000 \times 60}{Ph} \times \frac{1}{A} \quad \cdots\cdots\cdots(51)$$

N_M : Required rotational speed of the motor (min^{-1})
V : Feeding speed (m/s)
Ph : Ball Screw lead (mm)
A : Reduction ratio

The rated rotational speed of the motor must be equal to or above the calculated value (N_M) above.

$N_M \leqq N_R$

N_R : The rated rotational speed of the motor (min^{-1})

[Required Resolution]

Resolutions required for the encoder and the driver are obtained using the equation (52) based on the minimum feed amount, Ball Screw lead and reduction ratio.

$$B = \frac{Ph \cdot A}{S} \quad \cdots\cdots\cdots(52)$$

B : Resolution required for the encoder and the driver (p/rev)
Ph : Ball Screw lead (mm)
A : Reduction ratio
S : Minimum feed amount (mm)

[Motor Torque]

The torque required for the motor differs between uniform motion, acceleration and deceleration. To calculate the rotational torque, see "Studying the Rotational Torque" on A15-57.

a. Maximum torque

The maximum torque required for the motor must be equal to or below the maximum peak torque of the motor.

$T_{max} \leqq Tp_{max}$

T_{max} : Maximum torque acting on the motor

Tp_{max} : Maximum peak torque of the motor

b. Effective torque value

The effective value of the torque required for the motor must be calculated. The effective value of the torque is obtained using the equation (53) below.

$$T_{rms} = \sqrt{\frac{T_1^2 \times t_1 + T_2^2 \times t_2 + T_3^2 \times t_3}{t}} \quad \cdots\cdots\cdots(53)$$

T_{rms} : Effective torque value (N-mm)

T_n : Fluctuating torque (N-mm)

t_n : Time during which the torque T_n is applied (s)

t : Cycle time ($t=t_1+t_2+t_3$) (s)

The calculated effective value of the torque must be equal to or below the rated torque of the motor.

$T_{rms} \leqq T_R$

T_R : Rated torque of the motor (N-mm)

[Inertial Moment]

The inertial moment required for the motor is obtained using the equation (54) below.

$$J_M = \frac{J}{C} \quad \cdots\cdots\cdots(54)$$

J_M : Inertial moment required for the motor (kg・m²)

C : Factor determined by the motor and the driver

(It is normally between 3 to 10. However, it varies depending on the motor and the driver. Check the specific value in the catalog by the motor manufacturer.)

The inertial moment of the motor must be equal to or above the calculated J_M value.

When Using a Stepping Motor (Pulse Motor)

[Minimal Feed Amount(per Step)]

The step angle required for the motor and the driver is obtained using the equation (55) below based on the minimum feed amount, Ball Screw lead and reduction ratio.

$$E = \frac{360S}{Ph \cdot A} \quad \cdots\cdots\cdots(55)$$

E : Step angle required for the motor and the driver (°)
S : Minimum feed amount (per step) (mm)
Ph : Ball Screw lead (mm)
A : Reduction ratio

[Pulse Speed and Motor Torque]

a. Pulse speed

The pulse speed is obtained using the equation (56) below based on the feed speed and the minimum feed amount.

$$f = \frac{V \times 1000}{S} \quad \cdots\cdots\cdots(56)$$

f : Pulse speed (Hz)
V : Feeding speed (m/s)
S : Minimum feed amount (mm)

b. Torque required for the motor

The torque required for the motor differs between the uniform motion, the acceleration and the deceleration. To calculate the rotational torque, see "Studying the Rotational Torque" on A15-57.

Thus, the pulse speed required for the motor and the required torque can be calculated in the manner described above.
Although the torque varies depending on the motors, normally the calculated torque should be doubled to ensure safety. Check if the torque can be used in the motor's speed-torque curve.

Examples of Selecting a Ball Screw

High-speed Transfer Equipment (Horizontal Use)

[Selection Conditions]

Table Mass	m_1 =60kg
Work Mass	m_2 =20kg
Stroke length	ℓ_S=1000mm
Maximum speed	V_{max}=1m/s
Acceleration time	t_1 = 0.15s
Deceleration time	t_3 = 0.15s
Number of reciprocations per minute	n =8min^{-1}
Backlash	0.15mm
Positioning accuracy	±0.3 mm/1000 mm (Perform positioning from the negative direction)
Positioning accuracy repeatability	±0.1 mm
Minimum feed amount	s = 0.02mm/pulse
Desired service life time	30000h
Driving motor	AC servo motor Rated rotational speed: 3,000 min^{-1}
Inertial moment of the motor	J_m =1×10^{-3} kg・m^2
Reduction gear	None (direct coupling) A=1
Frictional coefficient of the guide surface	μ =0.003 (rolling)
Guide surface resistance	f=15 N (without load)

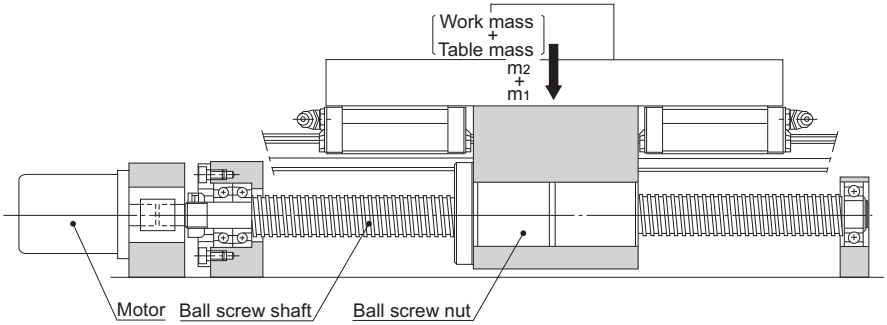

[Selection Items]

Screw shaft diameter
Lead
Nut model No.
Accuracy
Axial clearance
Screw shaft support method
Driving motor

[Selecting Lead Angle Accuracy and Axial Clearance]

● **Selecting Lead Angle Accuracy**

To achieve positioning accuracy of ±0.3 mm/1,000 mm:

$$\frac{\pm 0.3}{1000} = \frac{\pm 0.09}{300}$$

The lead angle accuracy must be ±0.09 mm/300 mm or higher.

Therefore, select the following as the accuracy grade of the Ball Screw (see Table1 on A15-18).

C7 (travel distance error: ±0.05mm/300mm)

Accuracy grade C7 is available for both the Rolled and the Precision Ball Screws. Assume that a Rolled Ball Screw is selected here because it is less costly.

● **Selecting Axial Clearance**

To satisfy the backlash of 0.15 mm, it is necessary to select a Ball Screw with an axial clearance of 0.15 mm or less.

Therefore, a Rolled Ball Screw model with a screw shaft diameter of 32 mm or less that meets the axial clearance of 0.15 mm or less (see Table13 on A15-25) meets the requirements.

Thus, a Rolled Ball Screw model with a screw shaft diameter of 32 mm or less and an accuracy grade of C7 is selected.

[Selecting a Screw Shaft]

● **Assuming the Screw Shaft Length**

Assume the overall nut length to be 100 mm and the screw shaft end length to be 100 mm.

Therefore, the overall length is determined as follows based on the stroke length of 1,000 mm.

1000 + 200 = 1200 mm

Thus, the screw shaft length is assumed to be 1,200 mm.

● **Selecting a Lead**

With the driving motor's rated rotational speed being 3,000 min^{-1} and the maximum speed 1 m/s, the Ball Screw lead is obtained as follows:

$$\frac{1 \times 1000 \times 60}{3000} = 20 \text{ mm}$$

Therefore, it is necessary to select a type with a lead of 20 mm or longer.

In addition, the Ball Screw and the motor can be mounted in direct coupling without using a reduction gear. The minimum resolution per revolution of an AC servomotor is obtained based on the resolution of the encoder (1,000 p/rev; 1,500 p/rev) provided as a standard accessory for the AC servomotor, as indicated below.

1000 p/rev(without multiplication)
1500 p/rev(without multiplication)
2000 p/rev(doubled)
3000 p/rev(doubled)
4000 p/rev(quadrupled)
6000 p/rev(quadrupled)

To meet the minimum feed amount of 0.02 mm/pulse, which is the selection requirement, the following should apply.

Lead 20mm —— 1000 p/rev
30mm —— 1500 p/rev
40mm —— 2000 p/rev
60mm —— 3000 p/rev
80mm —— 4000 p/rev

● Selecting a Screw Shaft Diameter

Those Ball Screw models that meet the requirements defined in Section [Selecting Lead Angle Accuracy and Axial Clearance] on A15-66: a rolled Ball Screw with a screw shaft diameter of 32 mm or less; and the requirement defined in Section [Selecting a Screw Shaft] on A15-66: a lead of 20, 30, 40, 60 or 80 mm (see Table20 on A15-33) are as follows.

Shaft diameter Lead
15mm —— 20mm
15mm —— 30mm
20mm —— 20mm
20mm —— 40mm
30mm —— 60mm

Since the screw shaft length has to be 1,200 mm as indicated in Section [Selecting a Screw Shaft] on A15-66, the shaft diameter of 15 mm is insufficient. Therefore, the Ball Screw should have a screw shaft diameter of 20 mm or greater.
Accordingly, there are three combinations of screw shaft diameters and leads that meet the requirements: screw shaft diameter of 20 mm/lead of 20 mm; 20 mm/40 mm; and 30 mm/60 mm.

● Selecting a Screw Shaft Support Method

Since the assumed type has a long stroke length of 1,000 mm and operates at high speed of 1 m/s, select either the fixed-supported or fixed-fixed configuration for the screw shaft support.
However, the fixed-fixed configuration requires a complicated structure, needs high accuracy in the installation.
Accordingly, the fixed-supported configuration is selected as the screw shaft support method.

● Studying the Permissible Axial Load

■Calculating the Maximum Axial Load

Guide surface resistance	f=15 N (without load)
Table Mass	m_1 =60 kg
Work Mass	m_2 =20 kg
Frictional coefficient of the guide surface	μ = 0.003
Maximum speed	V_{max}=1 m/s
Gravitational acceleration	g = 9.807 m/s^2
Acceleration time	t_1 = 0.15s

Accordingly, the required values are obtained as follows.

Acceleration:

$$\alpha = \frac{V_{max}}{t_1} = 6.67 \text{ m/s}^2$$

During forward acceleration:

$Fa_1 = \mu \cdot (m_1 + m_2)\, g + f + (m_1 + m_2) \cdot \alpha = 550$ N

During forward uniform motion:

$Fa_2 = \mu \cdot (m_1 + m_2)\, g + f = 17$ N

During forward deceleration:

$Fa_3 = \mu \cdot (m_1 + m_2)\, g + f - (m_1 + m_2) \cdot \alpha = -516$ N

During backward acceleration:

$Fa_4 = -\mu \cdot (m_1 + m_2)\, g - f - (m_1 + m_2) \cdot \alpha = -550$ N

During uniform backward motion:

$Fa_5 = -\mu \cdot (m_1 + m_2)\, g - f = -17$ N

During backward deceleration:

$Fa_6 = -\mu \cdot (m_1 + m_2)\, g - f + (m_1 + m_2) \cdot \alpha = 516$ N

Thus, the maximum axial load applied on the Ball Screw is as follows:

$Fa_{max} = Fa_1 = 550$ N

Therefore, if there is no problem with a shaft diameter of 20 mm and a lead of 20 mm (smallest thread minor diameter of 17.5 mm), then the screw shaft diameter of 30 mm should meet the requirements. Thus, the following calculations for the buckling load and the permissible compressive and tensile load of the screw shaft are performed while assuming a screw shaft diameter of 20 mm and a lead of 20 mm.

■Buckling Load on the Screw Shaft

Factor according to the mounting method η_2=20 (see A15-34)

Since the mounting method for the section between the nut and the bearing, where buckling is to be considered, is "fixed-fixed: "

Distance between two mounting surfaces ℓ_a=1100 mm (estimate)

Screw-shaft thread minor diameter d_1=17.5 mm

$$P_1 = \eta_2 \cdot \frac{d_1^4}{\ell_a^2} \times 10^4 = 20 \times \frac{17.5^4}{1100^2} \times 10^4 = 15500 \text{ N}$$

■Permissible Compressive and Tensile Load of the Screw Shaft

$P_2 = 116 \times d_1^2 = 116 \times 17.5^2 = 35500$ N

Thus, the buckling load and the permissible compressive and the tensile load of the screw shaft are at least equal to the maximum axial load. Therefore, a Ball Screw that meets these requirements can be used without a problem.

● Studying the Permissible Rotational Speed

■Maximum Rotational Speed

● Screw shaft diameter: 20 mm; lead: 20 mm

Maximum speed V_{max}=1 m/s

Lead Ph= 20 mm

$$N_{max} = \frac{V_{max} \times 60 \times 10^3}{Ph} = 3000 \text{ min}^{-1}$$

● Screw shaft diameter: 20 mm; lead: 40mm

Maximum speed V_{max}=1 m/s

Lead Ph= 40 mm

$$N_{max} = \frac{V_{max} \times 60 \times 10^3}{Ph} = 1500 \text{ min}^{-1}$$

● Screw shaft diameter: 30mm; lead: 60mm

Maximum speed V_{max}=1 m/s

Lead Ph= 60 mm

$$N_{max} = \frac{V_{max} \times 60 \times 10^3}{Ph} = 1000 \text{ min}^{-1}$$

■Permissible Rotational Speed Determined by the Dangerous Speed of the Screw Shaft

Factor according to the mounting method λ_2=15.1 (see A15-36)

Since the mounting method for the section between the nut and the bearing, where dangerous speed is to be considered, is "fixed-supported: "

Distance between two mounting surfaces ℓ_b=1100 mm (estimate)

● Screw shaft diameter: 20 mm; lead: 20 mm and 40 mm

Screw-shaft thread minor diameter d_1=17.5mm

$$N_1 = \lambda_2 \times \frac{d_1}{\ell_b^2} 10^7 = 15.1 \times \frac{17.5}{1100^2} \times 10^7 = 2180 \text{ min}^{-1}$$

● Screw shaft diameter: 30mm; lead: 60mm

Screw-shaft thread minor diameter d_1=26.4mm

$$N_1 = \lambda_2 \times \frac{d_1}{\ell_b^2} 10^7 = 15.1 \times \frac{26.4}{1100^2} \times 10^7 = 3294 \text{ min}^{-1}$$

■Permissible Rotational Speed Determined by the DN Value

● Screw shaft diameter: 20 mm; lead: 20 mm and 40mm (large lead Ball Screw)

Ball center-to-center diameter D=20.75 mm

$$N_2 = \frac{70000}{D} = \frac{70000}{20.75} = 3370 \text{ min}^{-1}$$

● Screw shaft diameter: 30 mm; lead: 60 mm (large lead Ball Screw)

Ball center-to-center diameter D=31.25 mm

$$N_2 = \frac{70000}{D} = \frac{70000}{31.25} = 2240 \text{ min}^{-1}$$

Thus, with a Ball Screw having a screw shaft diameter of 20 mm and a lead of 20 mm, the maximum rotational speed exceeds the dangerous speed.

In contrast, a combination of a screw shaft diameter of 20 mm and a lead of 40 mm, and another of a screw shaft diameter of 30 mm and a lead of 60 mm, meet the dangerous speed and the DN value.

Accordingly, a Ball Screw with a screw shaft diameter of 20 mm and a lead of 40 mm, or with a screw shaft diameter of 30 mm and a lead of 60 mm, is selected.

[Selecting a Nut]

● **Selecting a Nut Model Number**

Rolled Ball Screw models with a screw shaft diameter of 20 mm and a lead of 40 mm, or with a screw shaft diameter of 30 mm and a lead of 60 mm, are large lead Rolled Ball Screw model WTF variations.

WTF2040-2
(Ca=5.4 kN, C_0a=13.6 kN)
WTF2040-3
(Ca=6.6 kN, C_0a=17.2 kN)
WTF3060-2
(Ca=11.8 kN, C_0a=30.6 kN)
WTF3060-3
(Ca=14.5 kN, C_0a=38.9 kN)

● Studying the Permissible Axial Load

Study the permissible axial load of model WTF2040-2 (C_0a = 13.6 kN).
Assuming that this model is used in high-speed transfer equipment and an impact load is applied during deceleration, set the static safety factor (f_s) at 2.5 (see Table21 on A15-43).

$$\frac{C_0a}{f_s} = \frac{13.6}{2.5} = 5.44 \text{ kN} = 5440 \text{ N}$$

The obtained permissible axial load is greater than the maximum axial load of 550 N, and therefore, there will be no problem with this model.

■Calculating the Travel Distance

Maximum speed V_{max}=1 m/s
Acceleration time t_1 = 0.15s
Deceleration time t_3 = 0.15s

● Travel distance during acceleration

$$\ell_{1,4} = \frac{V_{max} \cdot t_1}{2} \times 10^3 = \frac{1 \times 0.15}{2} \times 10^3 = 75 \text{ mm}$$

● Travel distance during uniform motion

$$\ell_{2,5} = \ell_S - \frac{V_{max} \cdot t_1 + V_{max} \cdot t_3}{2} \times 10^3 = 1000 - \frac{1 \times 0.15 + 1 \times 0.15}{2} \times 10^3 = 850 \text{ mm}$$

● Travel distance during deceleration

$$\ell_{3,6} = \frac{V_{max} \cdot t_3}{2} \times 10^3 = \frac{1 \times 0.15}{2} \times 10^3 = 75 \text{ mm}$$

Based on the conditions above, the relationship between the applied axial load and the travel distance is shown in the table below.

Motion	Applied axial load Fa_N(N)	Travel distance ℓ_N(mm)
No.1: During forward acceleration	550	75
No.2: During forward uniform motion	17	850
No.3: During forward deceleration	−516	75
No.4: During backward acceleration	−550	75
No.5: During uniform backward motion	−17	850
No.6: During backward deceleration	516	75

* The subscript (N) indicates a motion number.

Since the load direction (as expressed in positive or negative sign) is reversed with Fa_3, Fa_4 and Fa_5, calculate the average axial load in the two directions.

■Average Axial Load

● Average axial load in the positive direction

Since the load direction varies, calculate the average axial load while assuming $Fa_{3,4,5}$ = 0N.

$$F_{m1} = \sqrt[3]{\frac{Fa_1^3 \times \ell_1 + Fa_2^3 \times \ell_2 + Fa_6^3 \times \ell_6}{\ell_1 + \ell_2 + \ell_3 + \ell_4 + \ell_5 + \ell_6}} = 225\ \text{N}$$

● Average axial load in the negative direction

Since the load direction varies, calculate the average axial load while assuming $Fa_{1,2,6}$ = 0N.

$$F_{m2} = \sqrt[3]{\frac{|Fa_3|^3 \times \ell_3 + |Fa_4|^3 \times \ell_4 + |Fa_5|^3 \times \ell_5}{\ell_1 + \ell_2 + \ell_3 + \ell_4 + \ell_5 + \ell_6}} = 225\ \text{N}$$

Since $F_{m1} = F_{m2}$, assume the average axial load to be $F_m = F_{m1} = F_{m2}$ = 225 N.

■Nominal Life

Load factor	f_w= 1.5 (see Table22 on A15-44)
Average load	F_m= 225 N
Nominal life	L (rev)

$$L = \left(\frac{Ca}{f_w \cdot F_m}\right)^3 \times 10^6$$

Assumed model number	Dynamic load rating Ca(N)	Nominal life L(rev)
WTF 2040-2	5400	4.1×10^9
WTF 2040-3	6600	7.47×10^9
WTF 3060-2	11800	4.27×10^{10}
WTF 3060-3	14500	7.93×10^{10}

■Average Revolutions per Minute

Number of reciprocations per minute $n = 8 min^{-1}$
Stroke $\ell s = 1000$ mm

● Lead: Ph = 40 mm

$$N_m = \frac{2 \times n \times \ell s}{Ph} = \frac{2 \times 8 \times 1000}{40} = 400 \text{ min}^{-1}$$

● Lead: Ph = 60 mm

$$N_m = \frac{2 \times n \times \ell s}{Ph} = \frac{2 \times 8 \times 1000}{60} = 267 \text{ min}^{-1}$$

■Calculating the Service Life Time on the Basis of the Nominal Life

● WTF2040-2

Nominal life $L = 4.1 \times 10^9$ rev
Average revolutions per minute $N_m = 400 \text{ min}^{-1}$

$$L_h = \frac{L}{60 \times N_m} = \frac{4.1 \times 10^9}{60 \times 400} = 171000 \text{ h}$$

● WTF2040-3

Nominal life $L = 7.47 \times 10^9$ rev
Average revolutions per minute $N_m = 400 \text{ min}^{-1}$

$$L_h = \frac{L}{60 \times N_m} = \frac{7.47 \times 10^9}{60 \times 400} = 311000 \text{ h}$$

● WTF3060-2

Nominal life $L = 4.27 \times 10^{10}$ rev
Average revolutions per minute $N_m = 267 \text{ min}^{-1}$

$$L_h = \frac{L}{60 \times N_m} = \frac{4.27 \times 10^{10}}{60 \times 267} = 2670000 \text{ h}$$

● WTF3060-3

Nominal life $L = 7.93 \times 10^{10}$ rev
Average revolutions per minute $N_m = 267 \text{ min}^{-1}$

$$L_h = \frac{L}{60 \times N_m} = \frac{7.93 \times 10^{10}}{60 \times 267} = 4950000 \text{ h}$$

■Calculating the Service Life in Travel Distance on the Basis of the Nominal Life

● WTF2040-2

Nominal life $L=4.1\times10^{9}$ rev

Lead Ph= 40 mm

$L_S = L \times Ph \times 10^{-6} = 164000$ km

● WTF2040-3

Nominal life $L=7.47\times10^{9}$ rev

Lead Ph= 40 mm

$L_S = L \times Ph \times 10^{-6} = 298800$ km

● WTF3060-2

Nominal life $L=4.27\times10^{10}$ rev

Lead Ph= 60 mm

$L_S = L \times Ph \times 10^{-6} = 2562000$ km

● WTF3060-3

Nominal life $L=7.93\times10^{10}$ rev

Lead Ph= 60 mm

$L_S = L \times Ph \times 10^{-6} = 4758000$ km

With all the conditions stated above, the following models satisfying the desired service life time of 30,000 hours are selected.

WTF 2040-2
WTF 2040-3
WTF 3060-2
WTF 3060-3

[Studying the Rigidity]

Since the conditions for selection do not include rigidity and this element is not particularly necessary, it is not described here.

[Studying the Positioning Accuracy]

● Studying the Lead Angle Accuracy

Accuracy grade C7 was selected in Section [Selecting Lead Angle Accuracy and Axial Clearance] on A15-66.

C7 (travel distance error: ±0.05mm/300mm)

● Studying the Axial Clearance

Since positioning is performed in a given direction only, axial clearance is not included in the positioning accuracy. As a result, there is no need to study the axial clearance.

WTF2040: axial clearance: 0.1 mm

WTF3060: axial clearance: 0.14 mm

● Studying the Axial Rigidity

Since the load direction does not change, it is unnecessary to study the positioning accuracy on the basis of the axial rigidity.

● Studying the Thermal Displacement through Heat Generation

Assume the temperature rise during operation to be 5℃.

The positioning accuracy based on the temperature rise is obtained as follows:

$$\begin{aligned}\Delta\ell &= \rho \times \Delta t \times \ell \\ &= 12 \times 10^{-6} \times 5 \times 1000 \\ &= 0.06 \text{ mm}\end{aligned}$$

● Studying the Orientation Change during Traveling

Since the ball screw center is 150 mm away from the point where the highest accuracy is required, it is necessary to study the orientation change during traveling.

Assume that pitching can be done within ±10 seconds because of the structure. The positioning error due to the pitching is obtained as follows:

$$\begin{aligned}\Delta a &= \ell \times \sin\theta \\ &= 150 \times \sin(\pm 10'') \\ &= \pm\, 0.007 \text{ mm}\end{aligned}$$

Thus, the positioning accuracy (Δp) is obtained as follows:

$$\Delta p = \frac{\pm 0.05 \times 1000}{300} \pm 0.007 + 0.06 = 0.234 \text{ mm}$$

Since models WTF2040-2, WTF2040-3, WTF3060-2 and WTF3060-3 meet the selection requirements throughout the studying process in Section [Selecting Lead Angle Accuracy and Axial Clearance] on A15-66 to Section [Studying the Positioning Accuracy] on A15-75, the most compact model WTF2040-2 is selected.

[Studying the Rotational Torque]

● **Friction Torque Due to an External Load**

The friction toruque is obtained as follows:

$$T_1 = \frac{Fa \cdot Ph}{2\pi \cdot \eta} \cdot A = \frac{17 \times 40}{2 \times \pi \times 0.9} \times 1 = 120\ N \cdot mm$$

● **Torque Due to a Preload on the Ball Screw**

The Ball Screw is not provided with a preload.

● **Torque Required for Acceleration**

Inertial Moment

Since the inertial moment per unit length of the screw shaft is 1.23 x 10^{-3} kg•cm^2/mm (see the specification table), the inertial moment of the screw shaft with an overall length of 1200 mm is obtained as follows.

$J_s = 1.23 \times 10^{-3} \times 1200 = 1.48\ kg \cdot cm^2$

$= 1.48 \times 10^{-4}\ kg \cdot m^2$

$$J = (m_1 + m_2)\left(\frac{Ph}{2 \times \pi}\right)^2 \cdot A^2 \times 10^{-6} + J_s \cdot A^2 = (60+20)\left(\frac{40}{2 \times \pi}\right)^2 \times 1^2 \times 10^{-6} + 1.48 \times 10^{-4} \times 1^2$$

$$= 3.39 \times 10^{-3}\ kg \cdot m^2$$

Angular acceleration:

$$\omega' = \frac{2\pi \cdot Nm}{60 \cdot t_1} = \frac{2\pi \times 1500}{60 \times 0.15} = 1050\ rad/s^2$$

Based on the above, the torque required for acceleration is obtained as follows.

$T_2 = (J + J_m) \times \omega' = (3.39 \times 10^{-3} + 1 \times 10^{-3}) \times 1050 = 4.61 N \cdot m$

$= 4.61 \times 10^3\ N \cdot mm$

Therefore, the required torque is specified as follows.

During acceleration

$T_k = T_1 + T_2 = 120 + 4.61 \times 10^3 = 4730\ N \cdot mm$

During uniform motion

$T_t = T_1 = 120\ N \cdot mm$

During deceleration

$T_g = T_1 - T_2 = 120 - 4.61 \times 10^3 = -4490\ N \cdot mm$

[Studying the Driving Motor]

● **Rotational Speed**

Since the Ball Screw lead is selected based on the rated rotational speed of the motor, it is unnecessary to study the rotational speed of the motor.

Maximum working rotational speed: 1500 min^{-1}

Rated rotational speed of the motor: 3000 min^{-1}

● **Minimum Feed Amount**

As with the rotational speed, the Ball Screw lead is selected based on the encoder normally used for an AC servomotor. Therefore, it is unnecessary to study this factor.

Encoder resolution : 1000 p/rev.

Doubled : 2000 p/rev

● **Motor Torque**

The torque during acceleration calculated in Section [Studying the Rotational Torque] on A15-76 is the required maximum torque.

T_{max} = 4730 N・mm

Therefore, the instantaneous maximum torque of the AC servomotor needs to be at least 4,730 N-mm.

● **Effective Torque Value**

The selection requirements and the torque calculated in Section [Studying the Rotational Torque] on A15-76 can be expressed as follows.

During acceleration:

T_k = 4730 N・mm

t_1 = 0.15 s

During uniform motion:

T_t = 120 N・mm

t_2 = 0.85 s

During deceleration:

T_g = 4490 N・mm

t_3 = 0.15 s

When stationary:

T_S = 0

t_4 = 2.6 s

The effective torque is obtained as follows, and the rated torque of the motor must be 1305 N•mm or greater.

$$T_{rms} = \sqrt{\frac{T_k^2 \cdot t_1 + T_t^2 \cdot t_2 + T_g^2 \cdot t_3 + T_s^2 \cdot t_4}{t_1 + t_2 + t_3 + t_4}} = \sqrt{\frac{4730^2 \times 0.15 + 120^2 \times 0.85 + 4490^2 \times 0.15 + 0}{0.15 + 0.85 + 0.15 + 2.6}}$$

$$= 1305 \text{ N} \cdot \text{mm}$$

● **Inertial Moment**

The inertial moment applied to the motor equals to the inertial moment calculated in Section [Studying the Rotational Torque] on A15-76.

$J = 3.39 \times 10^{-3}$ kg・m^2

Normally, the motor needs to have an inertial moment at least one tenth of the inertial moment applied to the motor, although the specific value varies depending on the motor manufacturer.
Therefore, the inertial moment of the AC servomotor must be 3.39×10^{-4}kg-m^2 or greater.

The selection has been completed.

Vertical Conveyance System

[Selection Conditions]

Table Mass m_1 =40kg
Work Mass m_2 =10kg
Stroke length ℓ_s= 600mm
Maximum speed V_{max}=0.3m/s
Acceleration time t_1 = 0.2s
Deceleration time t_3 = 0.2s
Number of reciprocations per minute
n =5min^{-1}
Backlash 0.1mm
Positioning accuracy ±0.7mm/600mm
Positioning accuracy repeatability ±0.05mm
Minimum feed amount s = 0.01mm/pulse
Service life time 20000h
Driving motor AC servo motor
Rated rotational speed:
3,000 min^{-1}
Inertial moment of the motor
J_m =5×10^{-5} kg・m^2
Reduction gear None (direct coupling)
Frictional coefficient of the guide surface
μ =0.003 (rolling)
Guide surface resistance
f=20 N (without load)

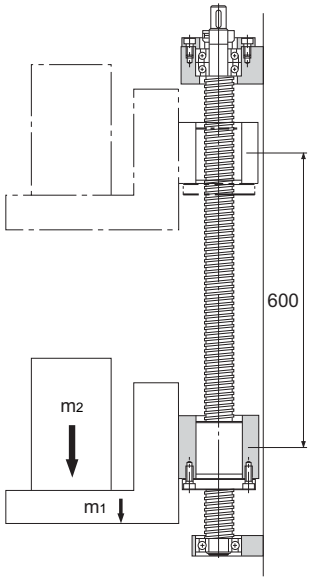

[Selection Items]

Screw shaft diameter
Lead
Nut model No.
Accuracy
Axial clearance
Screw shaft support method
Driving motor

[Selecting Lead Angle Accuracy and Axial Clearance]

● **Selecting the Lead Angle Accuracy**

To achieve positioning accuracy of ±0.7mm/600mm:

$$\frac{\pm 0.7}{600} = \frac{\pm 0.35}{300}$$

The lead angle accuracy must be ±0.35mm/300 mm or higher.

Therefore, the accuracy grade of the Ball Screw (see Table1 on A15-18) needs to be C10 (travel distance error: ±0.21 mm/300 mm).

Accuracy grade C10 is available for low priced, Rolled Ball Screws. Assume that a Rolled Ball Screw is selected.

● **Selecting the Axial Clearance**

The required backlashes is 0.1 mm or less. However, since an axial load is constantly applied in a single direction with vertical mount, the axial load does not serve as a backlash no matter how large it is.

Therefore, a low price, rolled Ball Screw is selected since there will not be a problem in axial clearance.

[Selecting a Screw Shaft]

● **Assuming the Screw Shaft Length**

Assume the overall nut length to be 100 mm and the screw shaft end length to be 100 mm.

Therefore, the overall length is determined as follows based on the stroke length of 600mm.

600 + 200 = 800 mm

Thus, the screw shaft length is assumed to be 800 mm.

● **Selecting the Lead**

With the driving motor's rated rotational speed being 3,000 min^{-1} and the maximum speed 0.3 m/s, the Ball Screw lead is obtained as follows:

$$\frac{0.3 \times 60 \times 1000}{3000} = 6 \text{ mm}$$

Therefore, it is necessary to select a type with a lead of 6mm or longer.

In addition, the Ball Screw and the motor can be mounted in direct coupling without using a reduction gear. The minimum resolution per revolution of an AC servomotor is obtained based on the resolution of the encoder (1,000 p/rev; 1,500 p/rev) provided as a standard accessory for the AC servomotor, as indicated below.

1000 p/rev(without multiplication)
1500 p/rev(without multiplication)
2000 p/rev(doubled)
3000 p/rev(doubled)
4000 p/rev(quadrupled)
6000 p/rev(quadrupled)

To meet the minimum feed amount of 0.010mm/pulse, which is the selection requirement, the following should apply.

Lead	6mm	—— 3000 p/rev
	8mm	—— 4000 p/rev
	10mm	—— 1000 p/rev
	20mm	—— 2000 p/rev
	40mm	—— 2000 p/rev

However, with the lead being 6 mm or 8 mm, the feed distance is 0.002 mm/pulse, and the starting pulse of the controller that issues commands to the motor driver needs to be at least 150 kpps, and the cost of the controller may be higher.
In addition, if the lead of the Ball Screw is greater, the torque required for the motor is also greater, and thus the cost will be higher.
Therefore, select 10 mm for the Ball Screw lead.

● Selecting the Screw Shaft Diameter

Those Ball Screw models that meet the lead being 10 mm as described in Section [Selecting Lead Angle Accuracy and Axial Clearance] on A15-80 and Section [Selecting a Screw Shaft] on A15-80 (see Table20 on A15-33) are as follows.

Shaft diameter	Lead
15mm	—— 10mm
20mm	—— 10mm
25mm	—— 10mm

Accordingly, the combination of a screw shaft diameter of 15 mm and a lead 10 mm is selected.

● Selecting the Screw Shaft Support Method

Since the assumed Ball Screw has a stroke length of 600 mm and operates at a maximum speed of 0.3 m/s (Ball Screw rotational speed: 1,800 min^{-1}), select the fixed-supported configuration for the screw shaft support.

● Studying the Permissible Axial Load

■Calculating the Maximum Axial Load

Guide surface resistance	f=20 N (without load)
Table Mass	m_1 =40 kg
Work Mass	m_2 =10 kg
Maximum speed	V_{max}=0.3 m/s
Acceleration time	t_1 = 0.2s

Accordingly, the required values are obtained as follows.
Acceleration

$$\alpha = \frac{V_{max}}{t_1} = 1.5\ m/s^2$$

During upward acceleration:

$Fa_1 = (m_1 + m_2) \cdot g + f + (m_1 + m_2) \cdot \alpha = 585$ N

During upward uniform motion:

$Fa_2 = (m_1 + m_2) \cdot g + f = 510$ N

During upward deceleration:

$Fa_3 = (m_1 + m_2) \cdot g + f - (m_1 + m_2) \cdot \alpha = 435$ N

During downward acceleration:

$Fa_4 = (m_1 + m_2) \cdot g - f - (m_1 + m_2) \cdot \alpha = 395$ N

During downward uniform motion:

$Fa_5 = (m_1 + m_2) \cdot g - f = 470$ N

During downward deceleration:

$Fa_6 = (m_1 + m_2) \cdot g - f + (m_1 + m_2) \cdot \alpha = 545$ N

Thus, the maximum axial load applied on the Ball Screw is as follows:

$Fa_{max} = Fa_1 = 585$ N

■Buckling Load of the Screw Shaft

Factor according to the mounting method η_2=20 (see A15-34)

Since the mounting method for the section between the nut and the bearing, where buckling is to be considered, is "fixed-fixed: "

Distance between two mounting surfaces	ℓ_a=700 mm (estimate)
Screw-shaft thread minor diameter	d_1=12.5 mm

$$P_1 = \eta_2 \cdot \frac{d_1^4}{\ell_a^2} \times 10^4 = 20 \times \frac{12.5^4}{700^2} \times 10^4 = 9960\ N$$

■Permissible Compressive and Tensile Load of the Screw Shaft

$P_2 = 116 d_1^2 = 116 \times 12.5^2 = 18100$ N

Thus, the buckling load and the permissible compressive and tensile load of the screw shaft are at least equal to the maximum axial load. Therefore, a Ball Screw that meets these requirements can be used without a problem.

● Studying the Permissible Rotational Speed

■Maximum Rotational Speed

● Screw shaft diameter: 15mm; lead: 10mm

Maximum speed V_{max}=0.3 m/s

Lead Ph= 10 mm

$$N_{max} = \frac{V_{max} \times 60 \times 10^3}{Ph} = 1800\ min^{-1}$$

■Permissible Rotational Speed Determined by the Dangerous Speed of the Screw Shaft

Factor according to the mounting method λ_2=15.1 (see A15-36)

Since the mounting method for the section between the nut and the bearing, where dangerous speed is to be considered, is "fixed-supported: "

Distance between two mounting surfaces ℓ_b=700 mm (estimate)

● Screw shaft diameter: 15mm; lead: 10mm

Screw-shaft thread minor diameter d_1=12.5 mm

$$N_1 = \lambda_2 \times \frac{d_1}{\ell_b^2} 10^7 = 15.1 \times \frac{12.5}{700^2} \times 10^7 = 3852\ min^{-1}$$

■Permissible Rotational Speed Determined by the DN Value

● Screw shaft diameter: 15mm; lead: 10mm (large lead Ball Screw)

Ball center-to-center diameter D=15.75 mm

$$N_2 = \frac{70000}{D} = \frac{70000}{15.75} = 4444\ min^{-1}$$

Thus, the dangerous speed and the DN value of the screw shaft are met.

[Selecting a Nut]

● Selecting a Nut Model Number

The Rolled Ball Screw with a screw shaft diameter of 15 mm and a lead of 10 mm is the following large-lead Rolled Ball Screw model.

BLK1510-5.6

(Ca=9.8 kN, C_0a=25.2 kN)

● Studying the Permissible Axial Load

Assuming that an impact load is applied during an acceleration and a deceleration, set the static safety factor (f_S) at 2 (see Table21 on A15-43).

$$Fa_{max} = \frac{C_0a}{f_S} = \frac{25.2}{2} = 12.6\ \text{kN} = 12600\ \text{N}$$

The obtained permissible axial load is greater than the maximum axial load of 585 N, and therefore, there will be no problem with this model.

● Studying the Service Life

■Calculating the Travel Distance

Maximum speed	V_{max}=0.3 m/s
Acceleration time	t_1 = 0.2s
Deceleration time	t_3 = 0.2s

● Travel distance during acceleration

$$\ell_{1,4} = \frac{V_{max} \cdot t_1}{2} \times 10^3 = \frac{1.3 \times 0.2}{2} \times 10^3 = 30\ \text{mm}$$

● Travel distance during uniform motion

$$\ell_{2,5} = \ell_S - \frac{V_{max} \cdot t_1 + V_{max} \cdot t_3}{2} \times 10^3 = 600 - \frac{0.3 \times 0.2 + 0.3 \times 0.2}{2} \times 10^3 = 540\ \text{mm}$$

● Travel distance during deceleration

$$\ell_{3,6} = \frac{V_{max} \cdot t_3}{2} \times 10^3 = \frac{0.3 \times 0.2}{2} \times 10^3 = 30\ \text{mm}$$

Based on the conditions above, the relationship between the applied axial load and the travel distance is shown in the table below.

Motion	Applied axial load Fa_N(N)	Travel distance ℓ_N(mm)
No1: During upward acceleration	585	30
No2: During upward uniform motion	510	540
No3: During upward deceleration	435	30
No4: During downward acceleration	395	30
No5: During downward uniform motion	470	540
No6: During downward deceleration	545	30

* The subscript (N) indicates a motion number.

■Average Axial Load

$$F_m = \sqrt[3]{\frac{1}{2 \times \ell_s}(Fa_1^3 \cdot \ell_1 + Fa_2^3 \cdot \ell_2 + Fa_3^3 \cdot \ell_3 + Fa_4^3 \cdot \ell_4 + Fa_5^3 \cdot \ell_5 + Fa_6^3 \cdot \ell_6)} = 492\ \text{N}$$

■Nominal Life

Dynamic load rating	Ca= 9800 N
Load factor	f_w= 1.5 (see Table22 on A15-44)
Average load	F_m= 492 N
Nominal life	L (rev)

$$L = \left(\frac{Ca}{f_w \cdot F_m}\right)^3 \times 10^6 = \left(\frac{9800}{1.5 \times 492}\right)^3 \times 10^6 = 2.34 \times 10^9\ \text{rev}$$

■Average Revolutions per Minute

Number of reciprocations per minute	n = 5 min^{-1}
Stroke	ℓ_s=600 mm
Lead	Ph= 10 mm

$$N_m = \frac{2 \times n \times \ell_s}{Ph} = \frac{2 \times 5 \times 600}{10} = 600\ \text{min}^{-1}$$

■Calculating the Service Life Time on the Basis of the Nominal Life

Nominal life	L=2.34×10^9 rev
Average revolutions per minute	N_m = 600 min^{-1}

$$L_h = \frac{L}{60 \cdot N_m} = \frac{2.34 \times 10^9}{60 \times 600} = 65000\ \text{h}$$

■Calculating the Service Life in Travel Distance on the Basis of the Nominal Life

Nominal life	L=2.34×10^9 rev
Lead	Ph= 10 mm

$L_s = L \times Ph \times 10^{-6}$ = 23400 km

With all the conditions stated above, model BLK1510-5.6 satisfies the desired service life time of 20,000 hours.

[Studying the Rigidity]

Since the conditions for selection do not include rigidity and this element is not particularly necessary, it is not described here.

[Studying the Positioning Accuracy]

● **Studying the Lead Angle Accuracy**

Accuracy grade C10 was selected in Section [Selecting Lead Angle Accuracy and Axial Clearance] on A15-80.

C10 (travel distance error: ±0.21mm/300mm)

● **Studying the Axial Clearance**

Since the axial load is constantly present in a given direction only because of vertical mount, there is no need to study the axial clearance.

● **Studying the Axial Rigidity**

Since the lead angle accuracy is achieved beyond the required positioning accuracy, there is no need to study the positioning accuracy determined by axial rigidity.

● **Studying the Thermal Displacement through Heat Generation**

Since the lead angle accuracy is achieved beyond the required positioning accuracy, there is no need to study the positioning accuracy determined by the heat generation.

● **Studying the Orientation Change during Traveling**

Since the lead angle accuracy is achieved at a much higher degree than the required positioning accuracy, there is no need to study the positioning accuracy.

[Studying the Rotational Torque]

● **Frictional Torque Due to an External Load**

During upward uniform motion:

$$T_1 = \frac{Fa_2 \cdot Ph}{2 \times \pi \times \eta} = \frac{510 \times 10}{2 \times \pi \times 0.9} = 900\ \mathrm{N \cdot mm}$$

During downward uniform motion:

$$T_2 = \frac{Fa_5 \cdot Ph}{2 \times \pi \times \eta} = \frac{470 \times 10}{2 \times \pi \times 0.9} = 830\ \mathrm{N \cdot mm}$$

● **Torque Due to a Preload on the Ball Screw**

The Ball Screw is not provided with a preload.

● Torque Required for Acceleration

Inertial Moment:

Since the inertial moment per unit length of the screw shaft is 3.9 x 10^{-4} kg•cm^2/mm (see the specification table), the inertial moment of the screw shaft with an overall length of 800mm is obtained as follows.

$J_s = 3.9 \times 10^{-4} \times 800 = 0.31$ kg・cm^2

$= 0.31 \times 10^{-4}$ kg・m^2

$$J = (m_1 + m_2)\left(\frac{Ph}{2\times\pi}\right)^2 \cdot A^2 \times 10^{-6} + J_s \cdot A^2 = (40+10)\left(\frac{10}{2\times\pi}\right)^2 \times 1^2 \times 10^{-6} + 0.31 \times 10^{-4} \times 1^2$$

$$= 1.58 \times 10^{-4}\,\mathrm{kg}\cdot\mathrm{m}^2$$

Angular acceleration:

$$\omega' = \frac{2\pi \cdot Nm}{60 \cdot t} = \frac{2\pi \times 1800}{60 \times 0.2} = 942\ \mathrm{rad/s}^2$$

Based on the above, the torque required for acceleration is obtained as follows.

$T_3 = (J + J_m) \cdot \omega' = (1.58 \times 10^{-4} + 5 \times 10^{-5}) \times 942 = 0.2$ N・m = 200 N・mm

Therefore, the required torque is specified as follows.

During upward acceleration:

$T_{k1} = T_1 + T_3 = 900 + 200 = 1100$ N・mm

During upward uniform motion:

$T_{t1} = T_1 = 900$ N・mm

During upward deceleration:

$T_{g1} = T_1 - T_3 = 900 - 200 = 700$ N・mm

During downward acceleration:

$T_{k2} = 630$ N・mm

During downward uniform motion:

$T_{t2} = 830$ N・mm

During downward deceleration:

$T_{g2} = 1030$ N-mm

[Studying the Driving Motor]

● **Rotational Speed**

Since the Ball Screw lead is selected based on the rated rotational speed of the motor, it is unnecessary to study the rotational speed of the motor.

Maximum working rotational speed: 1800 min^{-1}

Rated rotational speed of the motor: 3000 min^{-1}

● **Minimum Feed Amount**

As with the rotational speed, the Ball Screw lead is selected based on the encoder normally used for an AC servomotor. Therefore, it is unnecessary to study this factor.

Encoder resolution: 1000 p/rev.

● **Motor Torque**

The torque during acceleration calculated in Section [Studying the Rotational Torque] on A15-86 is the required maximum torque.

$T_{max} = T_{k1} = 1100$ N・mm

Therefore, the maximum peak torque of the AC servomotor needs to be at least 1100 N-mm.

● **Effective Torque Value**

The selection requirements and the torque calculated in Section [Studying the Rotational Torque] on A15-86 can be expressed as follows.

During upward acceleration:

$T_{k1} = 1100$ N・mm

$t_1 = 0.2$ s

During upward uniform motion:

$T_{t1} = 900$ N・mm

$t_2 = 1.8$ s

During upward deceleration:

$T_{g1} = 700$ N・mm

$t_3 = 0.2$ s

During downward acceleration:

$T_{k2} = 630$ N・mm

$t_1 = 0.2$ s

During downward uniform motion:

$T_{t2} = 830$ N・mm

$t_2 = 1.8$ s

During downward deceleration:

$T_{g2} = 1030$ N-mm

$t_3 = 0.2$ s

When stationary(m_2=0):

$T_S = 658$ N・mm

$t_4 = 7.6$ s

The effective torque is obtained as follows, and the rated torque of the motor must be 743 N•mm or greater.

$$T_{rms} = \sqrt{\frac{T_{k1}^2 \cdot t_1 + T_{t1}^2 \cdot t_2 + T_{g1}^2 \cdot t_3 + T_{k2}^2 \cdot t_1 + T_{t2}^2 \cdot t_2 + T_{g2}^2 \cdot t_3 + T_s^2 \cdot t_4}{t_1 + t_2 + t_3 + t_1 + t_2 + t_3 + t_4}}$$

$$= \sqrt{\frac{1100^2 \times 0.2 + 900^2 \times 1.8 + 700^2 \times 0.2 + 630^2 \times 0.2 + 830^2 \times 1.8 + 1030^2 \times 0.2 + 658^2 \times 7.6}{0.2 + 1.8 + 0.2 + 0.2 + 1.8 + 0.2 + 7.6}}$$

$$= 743 \text{ N} \cdot \text{mm}$$

● **Inertial Moment**

The inertial moment applied to the motor equals to the inertial moment calculated in Section [Studying the Rotational Torque] on A15-86.

$J = 1.58 \times 10^{-4}$ kg・m²

Normally, the motor needs to have an inertial moment at least one tenth of the inertial moment applied to the motor, although the specific value varies depending on the motor manufacturer. Therefore, the inertial moment of the AC servomotor must be 1.58×10^{-5}kg-m² or greater.

The selection has been completed.

Ball Screw

Feature of Each Model

Precision, Caged Ball Screw

Models SBN, SBK and HBN

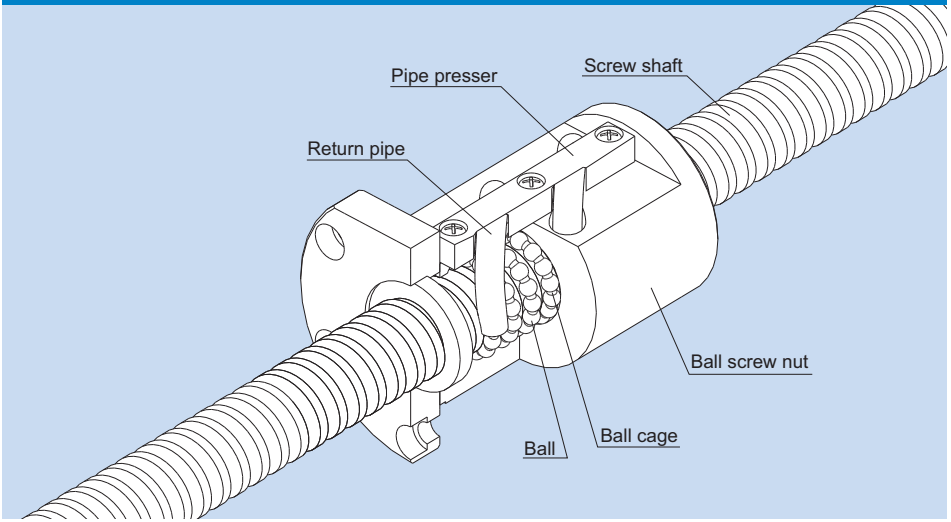

Fig.1 Structure of High-Speed Ball Screw with Ball Cage Model SBN

Structure and Features ▶▶▶ A15-93

Ball Cage Effect ▶▶▶ A15-93

Types and Features ▶▶▶ A15-96

Service Life ▶▶▶ A15-44

Axial Clearance ▶▶▶ A15-25

Accuracy Standards ▶▶▶ A15-18

Example of Assembling Model HBN ▶▶▶ A15-97

Dimensional Drawing, Dimensional Table, Example of Model Number Coding ▶▶▶ B15-6

Structure and Features

The use of a ball cage in the Ball Screw with the Ball Cage eliminates collision and friction between balls and increases the grease retention. This makes it possible to achieve a low noise, a low torque fluctuation and a long-term maintenance-free operation.
In addition, this Ball Screw is superbly capable of responding to the high speed because of an ideal ball recirculation structure, a strengthened circulation path and an adoption of the ball cage.

Ball Cage Effect

[Low Noise, Acceptable Running Sound]
The use of the ball cage eliminates the collision noise between the balls. Additionally, as balls are picked up in the tangential direction, the collision noise from the ball circulation has also been eliminated.

[Long-term Maintenance-free Operation]
The friction between the balls has been eliminated, and the grease retention has been improved through the provision of grease pockets. As a result, the long-term maintenance-free operation (i.e., lubrication is unnecessary over a long period) is achieved.

[Smooth Motion]
The use of a ball cage eliminates the friction between the balls and minimizes the torque fluctuation, thus allowing the smooth motion to be achieved.

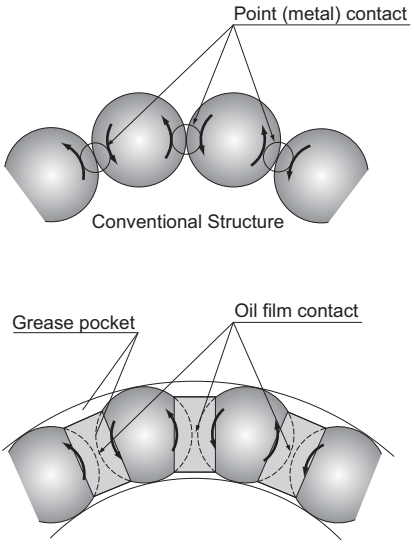

Structure of the Ball Screw with Ball Cage

[Low Noise]

● Noise Level Data

Since the balls in the Ball Screw with the Ball Cage do not collide with each other, they do not produce a metallic sound and a low noise level is achieved.

■Noise Measurement

[Conditions]

Item	Description
Sample	High load ball screw with ball cage HBN3210-5 Conventional type: model BNF3210-5
Stroke	600mm
Lubrication	Grease lubrication (lithium-based grease containing extreme pressure agent)

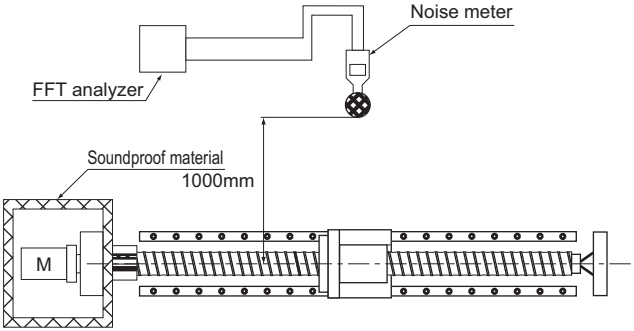

Noise measurement instrument

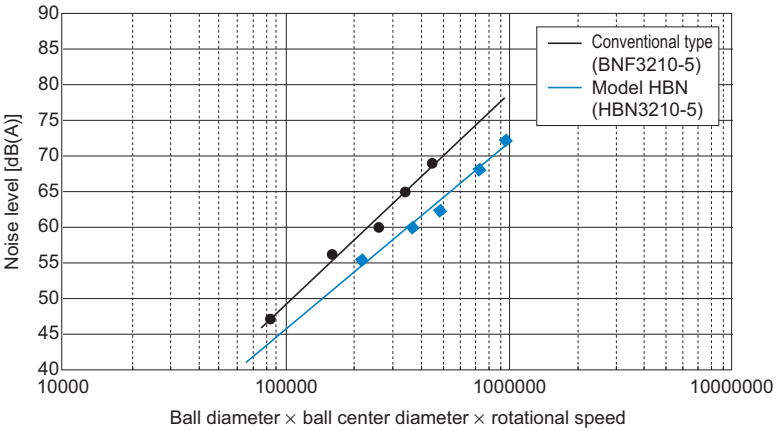

Fig.2 Ball Screw Noise Level

[Long-term Maintenance-free Operation]

● High speed, Load-bearing Capacity

Thanks to the ball circulating method supporting high speed and the caged ball technology, the Ball Screw with Ball Cage excels in high speed and load-bearing capacity.

■High Speed Durability Test

[Test conditions]

Item	Description
Sample	High Speed Ball Screw with Ball Cage SBN3210-7
Speed	3900(min^{-1})(DN value*: 130,000)
Stroke	400mm
Lubricant	THK AFG Grease
Quantity	12cm^3(lubricated every 1000km)
Applied load	1.73kN
Acceleration	1G

* DN value: Ball center-to-center diameter x revolutions per minute

[Test result]

Shows no deviation after running 10,000 km.

■Load Bearing Test

[Test conditions]

Item	Description
Sample	High Speed Ball Screw with Ball Cage SBN3210-7
Speed	1500(min^{-1})(DN value*: 50,000)
Stroke	300mm
Lubricant	THK AFG Grease
Quantity	12cm^3
Applied load	17.3kN(0.5Ca)
Acceleration	0.5G

[Test result]

Shows no deviation after running a distance 2.5 times the calculated service life.

[Smooth Motion]

● Low Torque Fluctuation

The caged ball technology allows smoother motion than the conventional type to be achieved, thus to reduce torque fluctuation.

[Conditions]

Item	Description
Shaft diameter/ lead	32/10mm
Shaft rotational speed	60min^{-1}

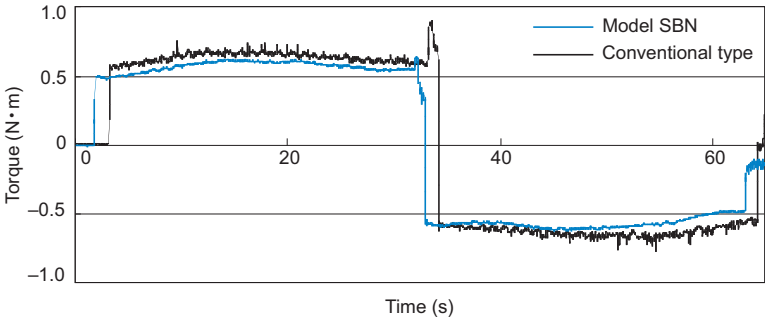

Fig.3 Torque Fluctuation Data

Types and Features

[Preload Type]

Model SBN

Specification Table⇒B15-8

Model SBN has a circulation structure where balls are picked up in the tangential direction and is provided with a strengthened circulation path, thus to achieve a DN value of 130,000.

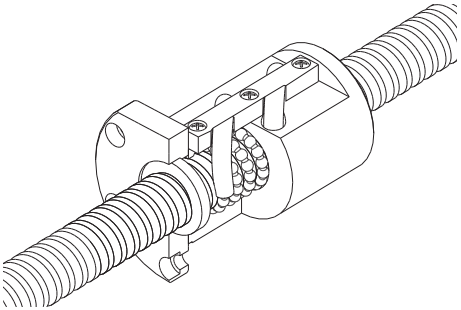

Model SBK

Specification Table⇒B15-10

As a result of adopting the offset preloading method, which shifts two rows of grooves of the ball screw nut, a compact structure is achieved.

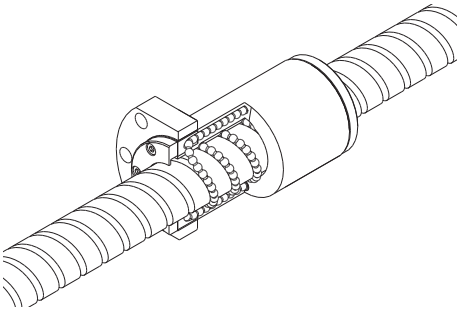

[No Preload Type]

Model HBN

Specification Table⇒B15-12

With the optimal design for high loads, this Ball Screw model achieves a rated load more than twice the conventional type.

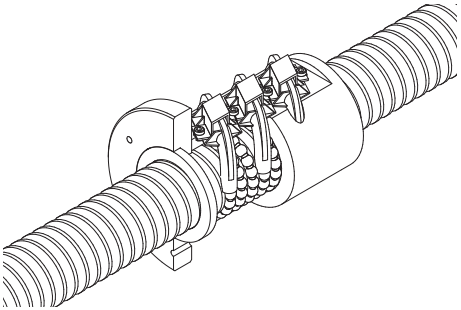

Service Life

For details,see A15-44.

Axial Clearance

For details,see A15-25.

Accuracy Standards

For details,see A15-18.

Example of Assembling Model HBN

For model HBN , position the support units for the fixed side and flange side as shown below and use the product such that no tensile load is applied to the bolt. If tensile load is applied to the bolt due to the circumstances of the product mounting or use, consider carefully the strength of the bolt.

[For nut movement]

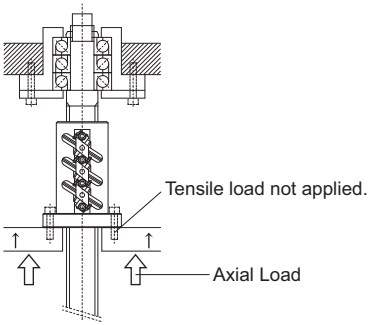

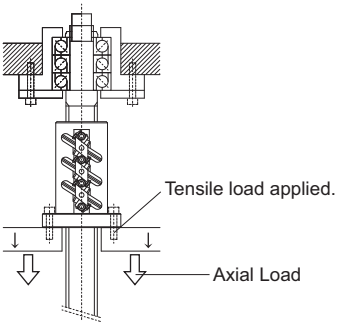

[For screw shaft movement]

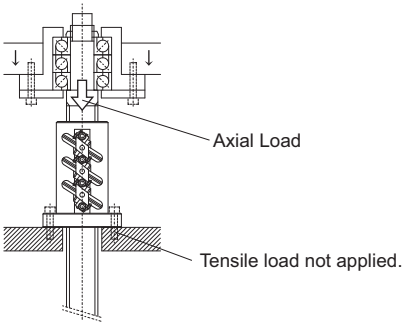

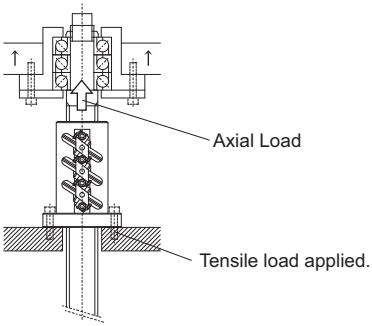

DIN Standard compliant Ball Screw (DIN69051)

Models EBA, EBB, EBC, EPA, EPB and EPC

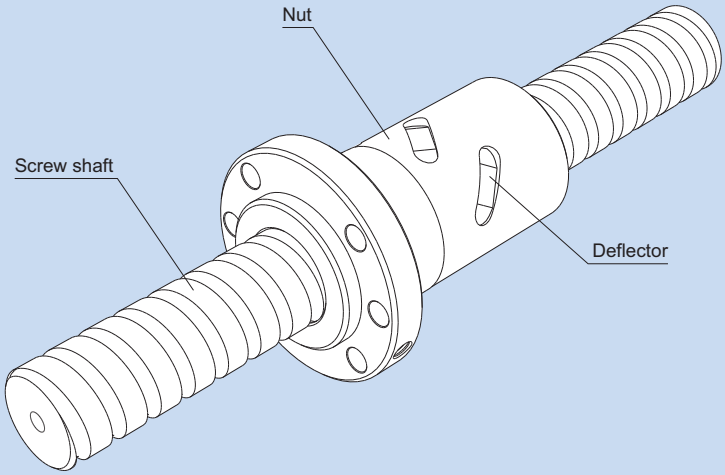

Fig.1 DIN Standard (DIN69051) Compliant Precision Ball Screw

Structure and Features ▶▶▶ A15-99

Types and Features ▶▶▶ A15-100

Service Life ▶▶▶ A15-44

Axial Clearance ▶▶▶ A15-25

Accuracy Standards ▶▶▶ A15-101

Dimensional Drawing, Dimensional Table, Example of Model Number Coding ▶▶▶ B15-16

Structure and Features

In the DIN standard compliant Ball Screw, balls under a load roll in the raceway cut between the screw shaft and the nut while receiving the axial load, travel along the groove of a deflector embedded inside the nut to the adjacent raceway, and then circulate back to the loaded area. Thus, the balls perform infinite rolling motion.
Two types of nuts are available: model EB of over-ball preloaded type or non-preloaded type, and model EP of offset preloaded type.

[Compact]
This Ball Screw is compactly built. Because of an internal circulation system using deflectors, the outer diameter of the nut is 70 to 80% of the conventional double nut and the overall nut length is only 60 to 80% of the return pipe nut.

[Compliant with a DIN standard]
The nut flange shape, mounting holes and rated load are compliant with DIN69051.

Models EPA/EBA

Specification Table⇒B15-22/B15-16

[Flange shape: round-flange type]

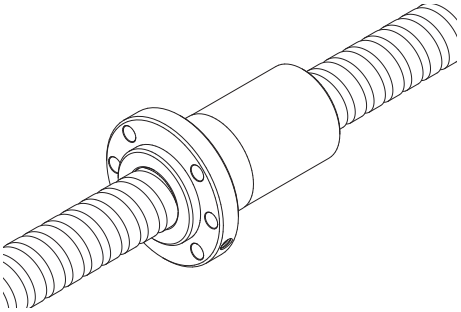

Models EPB/EBB

Specification Table⇒B15-24/B15-18

[Flange shape: type with two cut faces]

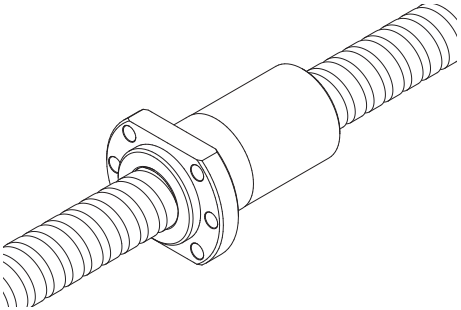

Models EPC/EBC

Specification Table⇒B15-26/B15-20

[Flange shape: type with one cut face]

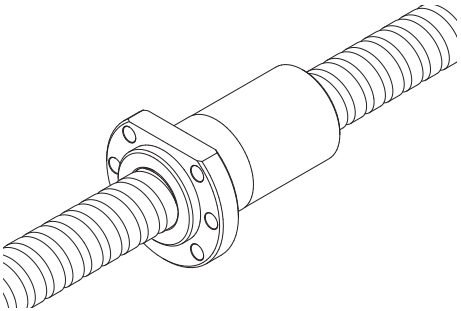

Service Life

For details,see A15-44.

Axial Clearance

For details,see A15-25.

Accuracy Standards

The accuracy of DIN standard compliant Ball Screw is controlled in accordance with ISO standard (ISO3408-3) and JIS standard (JIS B1192-1997). C, Cp and Ct grades are defined for this Ball Screw series.
Grade C (see page A15-17)
Grade Cp, Ct (see ISO 3408-3)

Grade	0	1	2	3	5	7
C	○	○	○	○	○	○
Cp	—	—	—	○	○	—
Ct	—	—	—	○	○	○

Standard-Stock Precision Ball Screw

Unfinished Shaft Ends
Models BIF, BNFN, MDK, MBF and BNF

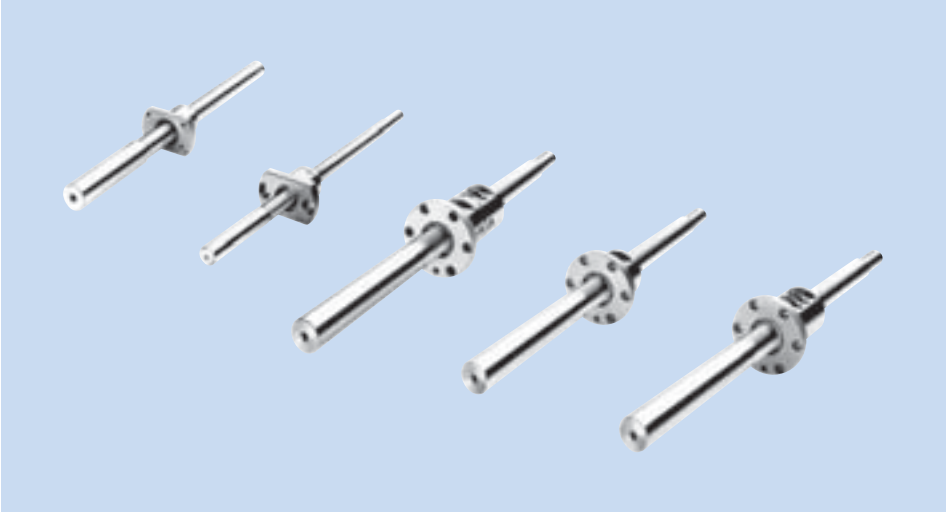

Structure and Features ▶▶▶ A15-103

Types and Features ▶▶▶ A15-104

Service Life ▶▶▶ A15-44

Nut Types and Axial Clearance ▶▶▶ A15-106

Dimensional Drawing, Dimensional Table, Example of Model Number Coding ▶▶▶ B15-30

Structure and Features

This type of Ball Screw is mass manufactured by cutting the standardized screw shafts of Precision Ball Screws to regular lengths. Additional machining of the shaft ends can easily be performed.
To meet various intended purposes, THK offers several Ball Screw models with different types of nuts: the double-nut type (model BNFN), the single-nut type (model BNF), the offset preload-nut type (model BIF) and the miniature Ball Screw (models MDK and MBF).

[Contamination Protection]

Nuts of the following model numbers are attached with a labyrinth seal.

- All variations of models BNFN, BNF and BIF
- Model MDK0802/1002/1202/1402/1404/1405

When dust or other foreign material may enter the Ball Screw, it is necessary to use a contamination protection device (e.g., bellows) to completely protect the screw shaft.

[Lubrication]

The ball screw nuts are supplied with lithium soap-group grease with shipments.
(Models MDK and MBF are applied only with an anti-rust oil.)

[Additional Machining of the Shaft End]

Since only the effective thread of the screw shaft is surface treated with induction-hardening (all variations of models BNFN, BNF and BIF; model MDK 1405) or carburizing (all variations of model MBF; model MDK0401 to 1404), the shaft ends can additionally be machined easily either by grinding or milling.
In addition, since both ends of the screw shaft have a center hole, they can be cylindrically ground.

Surface hardness of the effect thread	: HRC58 to 64
Hardness of the screw shaft ends	
All variation of models BNFN, BNF and BIF; model MDK 1405	: HRC22 to 27
All variations of model MBF; model MDK0401 to 1404	: HRC35 or below

THK has standardized the shapes of the screw shaft ends in order to allow speedy estimation and manufacturing of the Ball Screws.
The shapes of shaft ends are divided into those allowing the standard support units to be used (symbols H, K and J) and those compliant with JIS B 1192-1997 (symbols A, B and C). See A15-160 for details.

[Preload Type]

Model BIF

Specification Table⇒B15-40

The right and left screws are provided with a phase in the middle of the ball screw nut, and an axial clearance is set at a below-zero value (under a preload). This compact model is capable of a smooth motion.

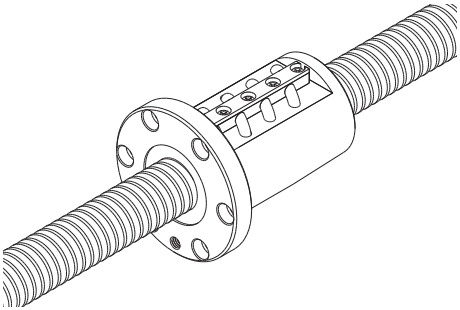

Model BNFN

Specification Table⇒B15-40

The most common type with a preload provided via a spacer between the two combined ball screw nuts to eliminate backlash. It can be mounted using the bolt holes drilled on the flange.

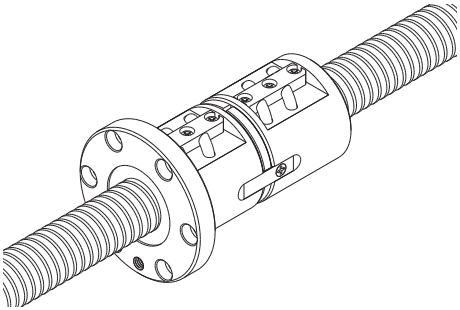

[No Preload Type]

Models MDK and MBF

Specification Table⇒B15-30

A miniature type with a screw shaft diameter of ϕ4 to ϕ14 mm and a lead of 1 to 5mm.

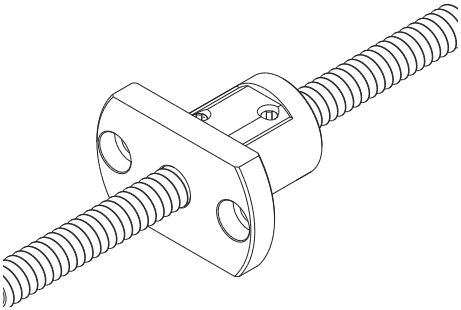

Model BNF

Specification Table⇒B15-40

The simplest type with a single ball screw nut. It is designed to be mounted using the bolt holes drilled on the flange.

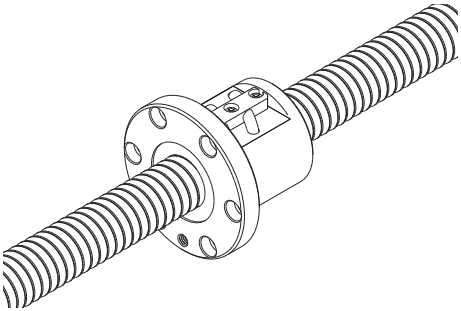

Service Life

For details,see A15-44.

Nut Types and Axial Clearance

Screw shaft outer diameter (mm)	ϕ 4 to 14			
Nut type	Model MDK		Model MBF	
	No preload type		No preload type	
Accuracy grades	C3, C5	C7	C3, C5	C7
Axial clearance (mm)	0.005 or less (GT)	0.02 or less (G2)	0.005 or less (GT)	0.02 or less (G2)
Preload	—		—	

Note) The symbols in the parentheses indicate axial clearance symbols.

Screw shaft out diameter (mm)	ϕ16 to 50					
Nut type	Model BIF		Model BNFN		Model BNF	
	Preload Type		Preload Type		No preload type	
Accuracy grades	C5	C7	C5	C7	C5	C7
Axial clearance (mm)	0 or less (G0)	0 or less (G0)	0 or less (G0)	0 or less (G0)	0.01 or less (G1)	0.02 or less (G2)
Preload	0.05Ca	0.05Ca	0.05Ca	0.05Ca	—	—

Note1) The symbols in the parentheses indicate axial clearance symbols.
Note2) Symbol "Ca" for preload indicates the basic dynamic load rating.

Standard-Stock Precision Ball Screw

Finished Shaft Ends
Model BNK

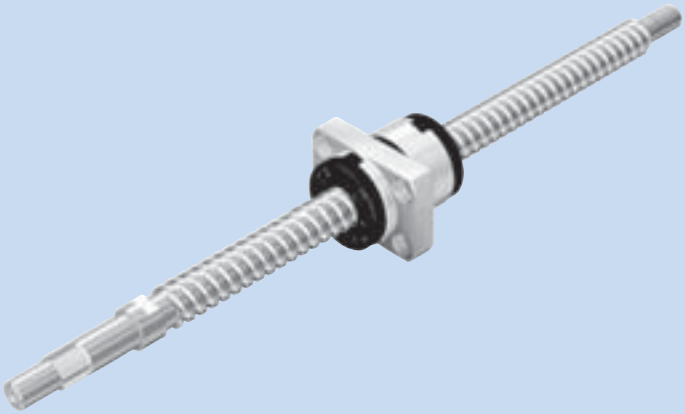

Features ▶▶▶ A15-109

Types and Features ▶▶▶ A15-109

Table of Ball Screw Types with Finished Shaft Ends and the Corresponding Support Units and Nut Brackets ▶▶▶ A15-110

Dimensional Drawing, Dimensional Table ▶▶▶ B15-54

Features

To meet the space-saving requirement, this type of Ball Screw has a standardized screw shaft and a ball screw nut. The ends of the screw shaft are standardized to fit the corresponding support unit. The shaft support method with models BNK0401, 0501 and 0601 is "fixed-free," while other models use the "fixed-supported" method with the shaft directly coupled with the motor.
Screw shafts and nuts are compactly designed. When a support unit and a nut bracket are combined with a Ball Screw, the assembly can be mounted on your machine as it is. Thus, a high-accuracy feed mechanism can easily be achieved.

[Contamination Protection and Lubrication]
Each ball screw nut contains a right amount of grease. In addition, the ball nuts of model BNK0802 or higher contain a labyrinth seal (with models BNK1510, BNK1520, BNK1616, BNK2020 and BNK2520, the end cap also serves as a labyrinth seal).
When foreign material may enter the screw nut, it is necessary to use a dust-prevention device (e.g., bellows) to completely protect the screw shaft.

Types and Features

Model BNK

Specification Table⇒B15-54

For this model, screw shafts with a diameter ϕ4 to ϕ25 mm and a lead 1 to 20 mm are available as the standard.

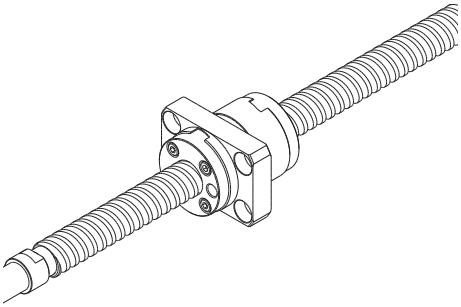

Table of Ball Screw Types with Finished Shaft Ends and the Corresponding Support Units and Nut Brackets

Model No.		BNK								
		0401	0501	0601	0801	0802	0810	1002	1004	1010
Accuracy grades		C3, C5, C7	C3, C5, C7	C3, C5, C7	C3, C5, C7	C3, C5, C7	C5, C7	C3, C5, C7	C3, C5, C7	C5, C7
Axial clearance[Note]		G0 GT G2	G0 GT G2	G0 GT G2	G0 GT G2	G0 GT G2	— GT G2	G0 GT G2	G0 GT G2	G0 GT G2
Stroke (mm)	20	●	●							
	30									
	40	●	●	●	●	●				
	50							●	●	
	60									
	70	●	●	●	●	●				
	100			●	●	●	●	●	●	●
	120									
	150				●	●	●	●	●	●
	170									
	200						●	●	●	●
	250						●		●	●
	300						●			●
	350									
	400									
	450									
	500									
	550									
	600									
	700									
	800									
	900									
	1000									
	1100									
	1200									
	1400									
	1600									
Support unit: square on fixed side		EK4	EK4	EK5	EK6	EK6	EK6	EK8	EK10	EK10
Support unit: round on fixed side		FK4	FK4	FK5	FK6	FK6	FK6	FK8	FK10	FK10
Support unit: square on supported side		—	—	—	EF6	EF6	EF6	EF6	EF10	EF10
Support unit: round on supported side		—	—	—	FF6	FF6	FF6	FF6	FF10	FF10
Nut bracket		—	—	—	—	—	—	—	MC1004	MC1004

Note) Axial clearance: G0: 0 or less
GT: 0.005 mm or less
G2: 0.02 mm or less

For details of the support unit and the nut bracket, see A15-152 onward and A15-162 onward, respectively.

BNK																														
	1202			1205			1208			1402			1404			1408			1510			1520			1616			2010			2020			2520		
	C3, C5, C7			C3, C5, C7			C7			C3, C5, C7			C3, C5, C7			C5, C7			C5, C7			C5, C7			C5, C7			C5, C7			C5, C7			C5, C7		
	G0	GT	G2	G0	GT	G2	—	—	G2	G0	GT	G2	G0	GT	G2	G0	GT	G2	G0	GT	G2	G0	GT	G2	G0	GT	G2	G0	GT	G2	G0	GT	G2	G0	GT	G2
	●			●			●			●																										
	●			●			●			●			●																							
	●			●			●			●			●			●			●			●			●											
	●			●			●			●			●			●			●			●			●											
	●			●			●									●			●			●			●											
										●			●			●			●			●			●			●			●						
																●			●			●			●											
													●			●			●			●			●			●			●						
																●			●			●			●											
																●			●			●			●			●			●			●			●
																●			●			●			●											
																●			●			●			●			●			●			●			●
																●			●			●			●			●			●						
																			●			●			●			●			●			●			●
																												●			●						
																												●			●			●			●
																												●			●						
																																				●
																																				●
																																				●
	EK10			EK10			EK10			EK12			EK12			EK12			EK12			EK12			EK12			EK15			EK15			EK20		
	FK10			FK10			FK10			FK12			FK12			FK12			FK12			FK12			FK12			FK15			FK15			FK20		
	EF10			EF10			EF10			EF12			EF12			EF12			EF12			EF12			EF12			EF15			EF15			EF20		
	FF10			FF10			FF10			FF12			FF12			FF12			FF12			FF12			FF12			FF15			FF15			FF20		
	—			MC1205			MC1205			—			—			MC1408			MC1408			MC1408			MC1408			MC2010			MC2020			—		

Precision Ball Screw

Models BIF, DIK, BNFN, DKN, BLW, BNF, DK, MDK, BLK/WGF and BNT

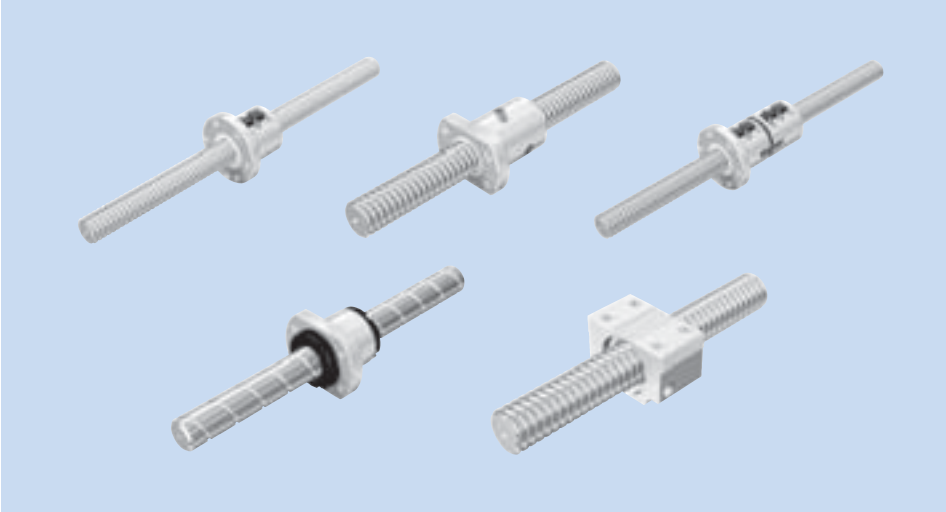

Structure and Features ▶▶▶ A15-113
Types and Features ▶▶▶ A15-117
Service Life ▶▶▶ A15-44
Axial Clearance ▶▶▶ A15-25
Accuracy Standards ▶▶▶ A15-18
Dimensional Drawing, Dimensional Table (Preload Type) ▶▶▶ B15-98
Dimensional Drawing, Dimensional Table (No Preload Type) ▶▶▶ B15-132
Model Number Coding ▶▶▶ B15-164

For THK Precision Ball Screws, a wide array of precision-ground screw shafts and ball screw nuts are available as standard to meet diversified applications.

Structure and Features

[Combinations of Various shaft Diameters and Leads]

You can select the combination of a shaft diameter and a lead that meet the intended use from the various nut types and the screw shaft leads. Those nut types include the return-pipe nuts, which represent the most extensive variations among the series, the compact simple nuts and the large-lead end-cap nuts.

[Standard-stock Types (with Unfinished Shaft Ends/Finished Shaft Ends) are Available]

The unfinished shaft end types, which are mass manufactured by cutting the standardized screw shafts to the standard lengths, and those with finished shaft ends, for which the screw shaft ends are machined to match the corresponding the support units, are available as the standard.

[Accuracy Standards Compliant with JIS (ISO)]

The accuracy of the Ball Screw is controlled in accordance with the JIS standards (JIS B1192-1997).

	Precision Ball Screw						Rolled Ball Screw	
Accuracy grades	C0	C1	C2	C3	C5	C7	C8	C10

Type	Series symbol	Grade	Remarks
For positioning	C	0, 1, 3, 5	JIS series
	Cp	1, 3, 5	ISO compliant
For transport	Ct	1, 3, 5, 7, 10	

[Options that Meet the Environment are Available]

Options are available consisting of a lubricator (QZ), which enables the maintenance interval to be significantly extended, and a wiper ring (W), which improves the ability to remove foreign materials in adverse environments.

[Structure and Features of Offset Preload Type Simple-Nut Ball Screw Model DIK]

The Simple-Nut Ball Screw model DIK is an offset preload type in which a phase is provided in the middle of a single ball screw nut, and an axial clearance is set at a below-zero value (under a pre-load).

Model DIK has a more compact structure and allows smoother motion than the conventional double-nut type (spacer inserted between two nuts).

[Comparison between the Simple Nut and the Double-Nuts]

Simple-Nut Ball Screw Model DIK	Conventional Double-Nut Type Ball Screw Model BNFN
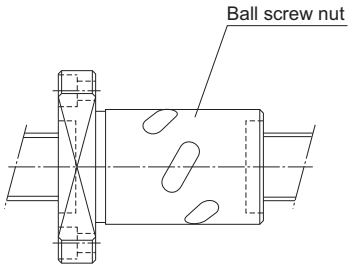	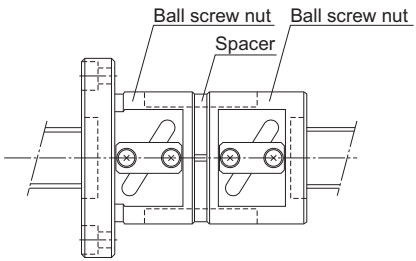
Preloading Structure	
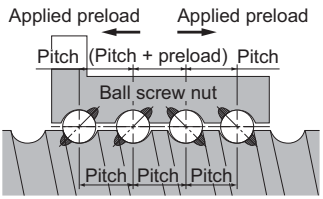	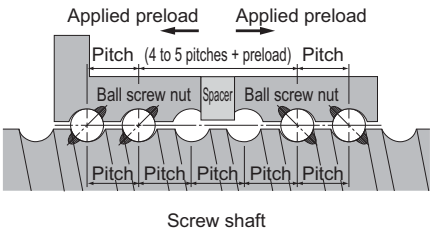

Simple-Nut Ball Screw Model DIK	Conventional Double-Nut Type Ball Screw Model BNFN
Rotational Performance	
The preload adjustment with Simple Nut Ball Screw model DIK is performed according to the ball diameter. This eliminates the inconsistency in the contact angle, which is the most important factor of the Ball Screw performance. It also ensures the high rigidity, the smooth motion and the high wobbling accuracy.	The use of a spacer in the double-nuts tends to cause inconsistency in the contact angle due to inaccurate flatness of the spacer surface and an inaccurate perpendicularity of the nut. This results in a non-uniform ball contact, an inferior rotational performance and a low wobbling accuracy.
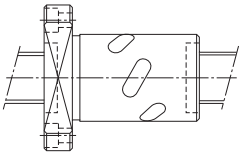	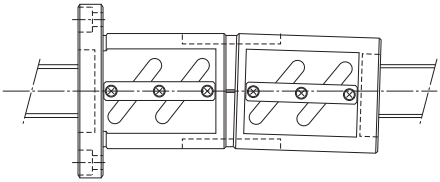
Dimensions	
Since Simple-Nut Ball Screw model DIK is based on a preloading mechanism that does not require a spacer, the overall nut length can be kept short. As a result, the whole nut can be lightly and compactly designed.	
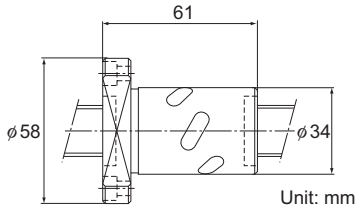 Model DIK 2005-6	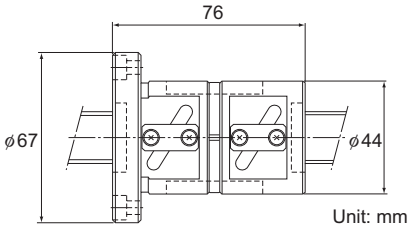 Model BNFN 2005-2.5

[Comparison between the Offset Preload Type of Simple-Nut Ball Screw and the Oversize Preload Nut Ball Screw]

Simple-Nut Ball Screw Model DIK	Conventional Oversize Preload Nut Ball Screw Model BNF
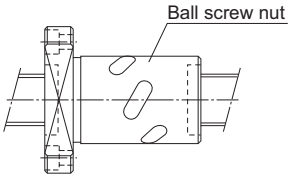	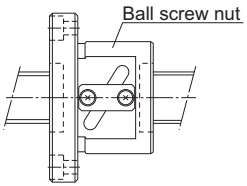
Preloading Structure	
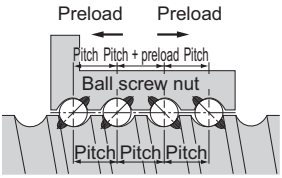 Screw shaft	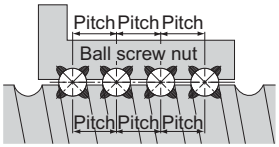 Screw shaft
Accuracy Life	
Simple-Nut Ball Screw model DIK has a similar preloading structure to that of the double-nut type although the former only has one ball screw shaft. As a result, no differential slip or spin occurs, thus to minimize the increase in the rotational torque and the generation of heat. Accordingly, a high level of accuracy can be maintained over a long period.	With the oversize preload nut Ball Screw, a preload is provided through the balls each in contact with the raceway at four points. This causes differential slip and spin to increase the rotational torque, resulting in an accelerated wear and a heat generation. Therefore, the accuracy deteriorates in a short period.
2 point contact structure 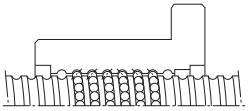 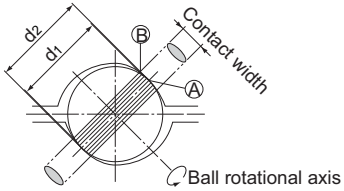 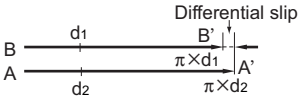	4 point contact structure 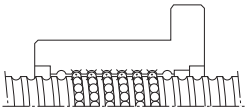 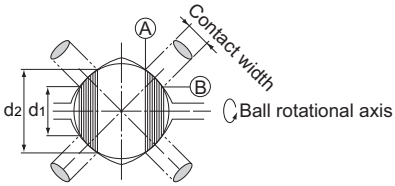 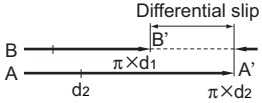

Types and Features

[Preload Type]

Model BIF

Specification Table⇒B15-98

The right and the left screws are provided with a phase in the middle of the ball screw nut, and an axial clearance is set at a below-zero value (under a preload). This compact model is capable of a smooth motion.

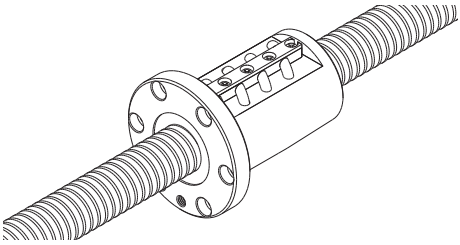

Model DIK

Specification Table⇒B15-98

The right and the left screws are provided with a phase in the middle of the ball screw nut, and an axial clearance is set at a below-zero value (under a preload). This compact model is capable of a smooth motion.

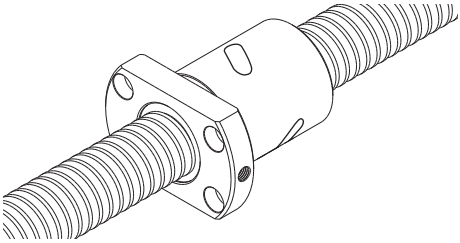

Model BNFN

Specification Table⇒B15-98

The most common type with a preload provided via a spacer between the two combined ball screw nuts to eliminate the backlash. It can be mounted using the bolt holes drilled on the flange.

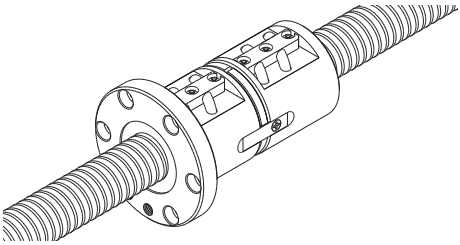

Model DKN

Specification Table⇒B15-118

A preload is provided via a spacer between the two combined ball screw nuts to achieve a below-zero axial clearance (under a preload).

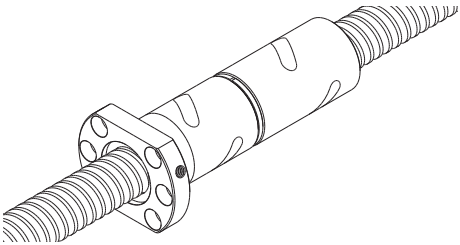

Model BLW

Specification Table⇒B15-98

Since a preload is provided through a spacer between two large lead nuts, high-speed feed without by backlash is ensured.

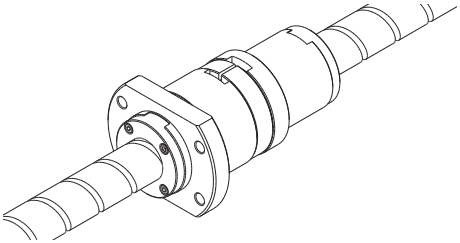

[No Preload Type]

Model BNF

Specification Table⇒B15-134

The simplest type with a single ball screw nut. It is designed to be mounted using the bolt holes drilled on the flange.

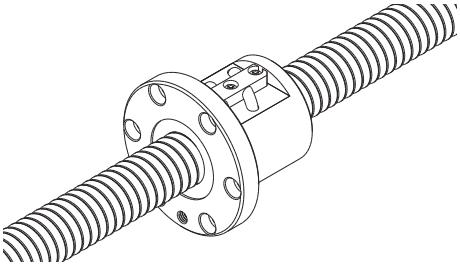

Model DK

Specification Table⇒B15-132

The most compact type, with a ball screw nut diameter 70 to 80% of that of the return-pipe nut.

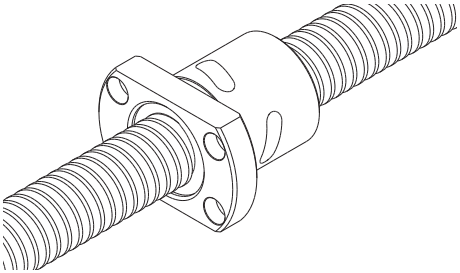

Model MDK

Specification Table⇒B15-132

This model is a miniature nut with a screw shaft diameter of ϕ4 to 14 mm and a lead of 1 to 5 mm.

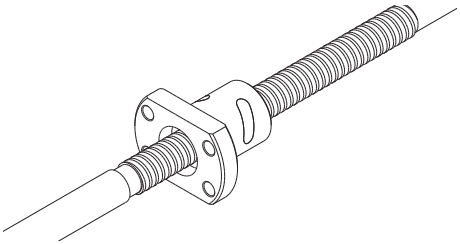

Models BLK/WGF

Specification Table⇒B15-132

With model BLK, the shaft diameter is equal to the lead dimension. Model WGF has a lead dimension 1.5 to 3 times longer than the shaft diameter.

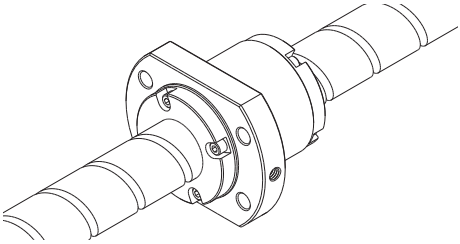

Square Ball Screw Nut Model BNT

Specification Table⇒B15-162

Since mounting screw holes are machined on the square ball screw nut, this model can compactly be mounted on the machine without a housing.

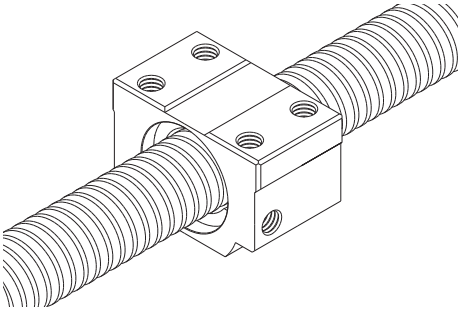

Service Life

For details,see A15-44.

Axial Clearance

For details,see A15-25.

Accuracy Standards

For details,see A15-18.

Precision Rotary Ball Screw

Models DIR and BLR

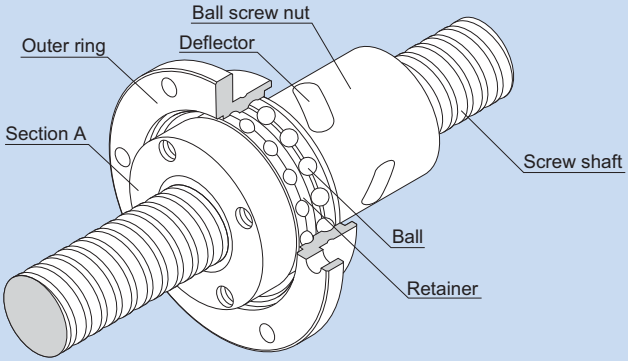

Structure of Standard-Lead Rotary Nut Ball Screw Model DIR

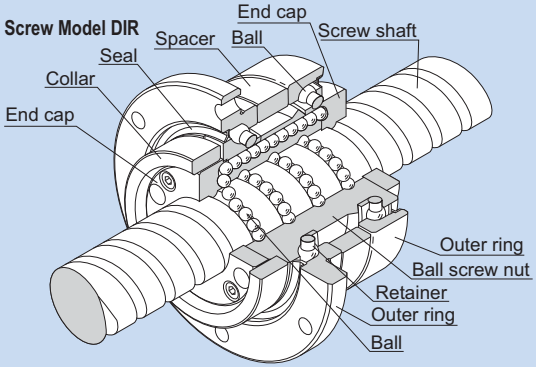

Structure of Large Lead Rotary Nut Ball Screw Model BLR

Structure and Features ▶▶▶ A15-121

Type ▶▶▶ A15-123

Service Life ▶▶▶ A15-44

Axial Clearance ▶▶▶ A15-25

Accuracy Standards ▶▶▶ A15-124

Example of Assembly ▶▶▶ A15-126

Dimensional Drawing, Dimensional Table, Example of Model Number Coding ▶▶▶ B15-166

Structure and Features

[Model DIR]

Standard-Lead Rotary-Nut Ball Screw model DIR is a rotary-nut Ball Screw that has a structure where a simple-nut Ball Screw is integrated with a support bearing.
Its ball screw nut serves as a ball recirculation structure using deflectors. Balls travel along the groove of the deflector mounted in the ball screw nut to the adjacent raceway, and then circulate back to the loaded area to complete an infinite rolling motion.
Being an offset preload nut, the single ball screw nut provides different phases to the right and left thread in the middle of the nut, thus to set the axial clearance below zero (a preload is provided). This allows more compact, smoother motion to be achieved than the conventional double-nut type (a spacer is inserted between two nuts).

The support bearing comprises of two rows of DB type angular bearings with a contact angle of 45° to provide a preload. The collar, previously used to mount a pulley, is integrated with the ball screw nut. (See the A section.)

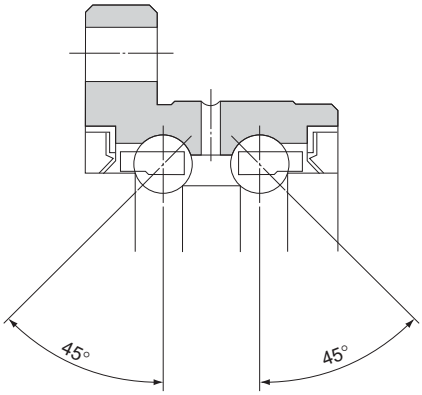

Fig.1 Structure of the Support Bearing

● Compact

Because of the internal circulation mechanism using a deflector, the outer diameter is only 70 to 80%, and the overall length is 60 to 80%, of that of the return-pipe nut, thus to reduce the weight and decrease the inertia during acceleration.
Since the nut and the support bearing are integrated, a highly accurate, and a compact design is achieved.
In addition, small inertia due to the lightweight ball screw nut ensures high responsiveness.

● Capable of Fine Positioning

Being a Standard-Lead Ball Screw, it is capable of fine positioning despite that the ball screw nut rotates.

● Accuracy can Easily be Established

As the support bearing is integrated with the outer ring, the bearing can be assembled with the nut housing on the end face of the outer ring flange. This makes it easy to center the ball screw nut and establish accuracy.

● Well Balanced

Since the deflector is evenly placed along the circumference, a superb balance is ensured while the ball screw nut is rotating.

● **Stability in the Low-speed Range**

Traditionally, motors tend to have an uneven torque and a speed in the low-speed range due to the external causes. With model DIR, the motor can be connected independently with the screw shaft and the ball screw nut, thus to allow micro feeding within the motor's stable rotation range.

[Model BLR]

The Rotary Ball Screw is a rotary-nut ball screw unit that has an integrated structure consisting of a ball screw nut and a support bearing. The support bearing is an angular bearing that has a contact angle of 60°, contains an increased number of balls and achieves large axial rigidity.
Model BLR is divided into two types: Precision Ball Screw and Rolled Screw Ball.

● **Smooth Motion**

It achieves smoother motion than rack-and-pinion based straight motion. Also, since the screw shaft does not rotate because of the ball screw nut drive, this model does not show skipping, produces low noise and generates little heat.

● **Low Noise even in High-speed Rotation**

Model BLR produces very low noise when the balls are picked up along the end cap. In addition, the balls circulate by passing through the ball screw nut, allowing this model to be used at high speed.

● **High Rigidity**

The support bearing of this model is larger than that of the screw shaft rotational type. Thus, its axial rigidity is significantly increased.

● **Compact**

Since the nut and the support bearing are integrated, a highly accurate, and a compact design is achieved.

● **Easy Installation**

By simply mounting this model to the housing with bolts, a ball screw nut rotating mechanism can be obtained. (For the housing's inner-diameter tolerance, H7 is recommended.)

Type

[Preload Type]

Model DIR

Specification Table⇒B15-166

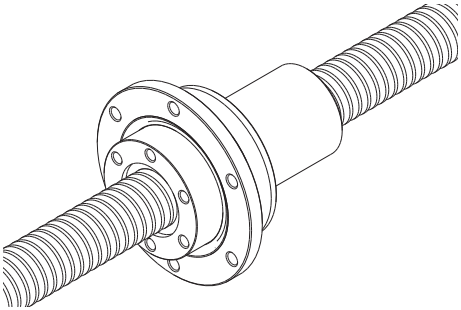

[No Preload Type]

Model BLR

Specification Table⇒B15-168

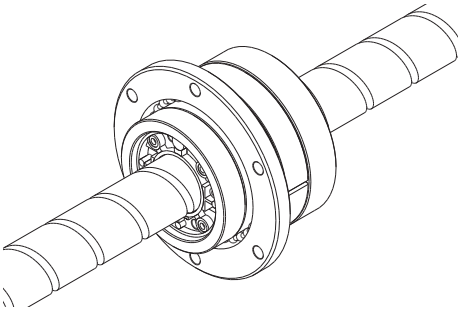

Service Life

For details,see A15-44.

Axial Clearance

For details,see A15-25.

Accuracy Standards

[Model DIR]

The accuracy of model DIR is compliant with a the JIS standard (JIS B 1192-1997) except for the radial runout of the circumference of the ball screw nut from the screw axis (D) and the perpendicularity of the flange-mounting surface against the screw axis (C).

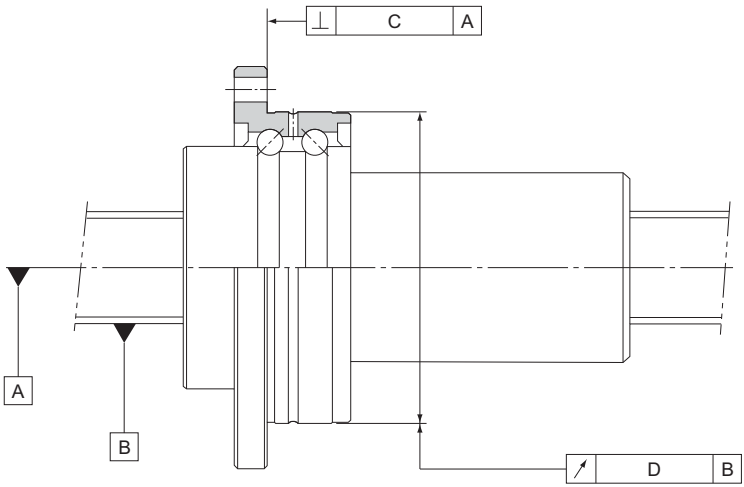

Unit: mm

Accuracy grades	C3		C5		C7	
Model No.	C	D	C	D	C	D
DIR 16□□	0.013	0.017	0.016	0.020	0.023	0.035
DIR 20□□	0.013	0.017	0.016	0.020	0.023	0.035
DIR 25□□	0.015	0.020	0.018	0.024	0.023	0.035
DIR 32□□	0.015	0.020	0.018	0.024	0.023	0.035
DIR 36□□	0.016	0.021	0.019	0.025	0.024	0.036
DIR 40□□	0.018	0.026	0.021	0.033	0.026	0.036

[Model BLR]

The accuracy of model BLR is compliant with a the JIS standard (JIS B 1192-1997) except for the radial runout of the circumference of the ball screw nut from the screw axis (D) and the perpendicularity of the flange-mounting surface against the screw axis (C).

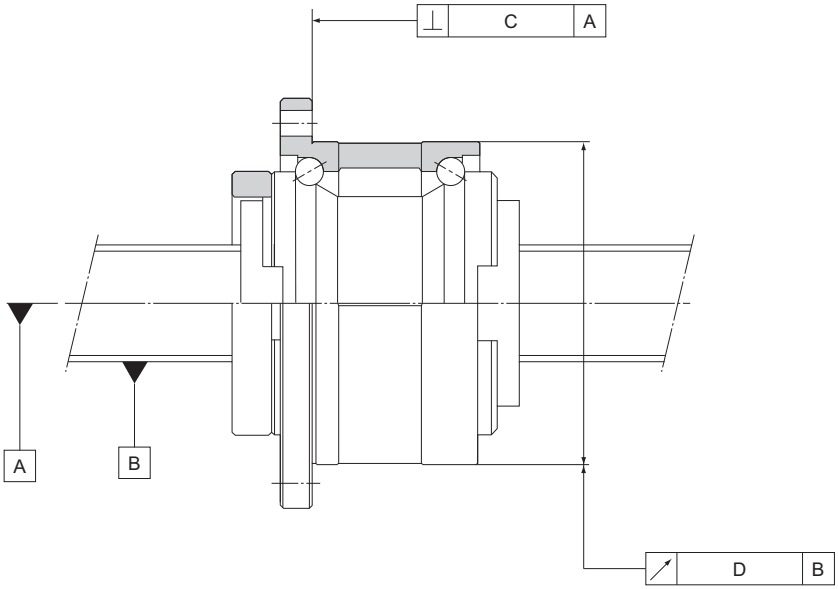

Unit: mm

Lead angle accuracy	C3		C5		C7	
Accuracy grades	C3		C5		C7	
Model No.	C	D	C	D	C	D
BLR 1616	0.013	0.017	0.016	0.020	0.023	0.035
BLR 2020	0.013	0.017	0.016	0.020	0.023	0.035
BLR 2525	0.015	0.020	0.018	0.024	0.023	0.035
BLR 3232	0.015	0.020	0.018	0.024	0.023	0.035
BLR 3636	0.016	0.021	0.019	0.025	0.024	0.036
BLR 4040	0.018	0.026	0.021	0.033	0.026	0.046
BLR 5050	0.018	0.026	0.021	0.033	0.026	0.046

Example of Assembly

[Example of Mounting Ball Screw Nut Model DIR]

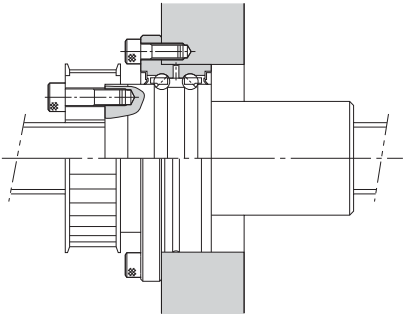

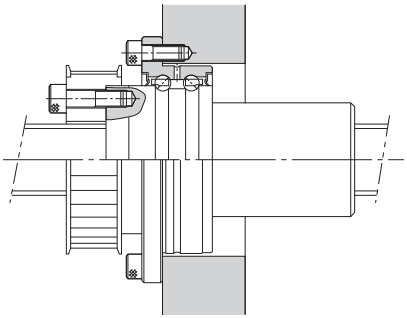

Installation to the housing can be performed on the end face of the outer ring flange.

[Example of Mounting Ball Screw Nut Model BLR]

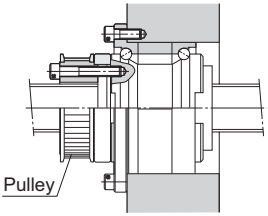

Standard installation method

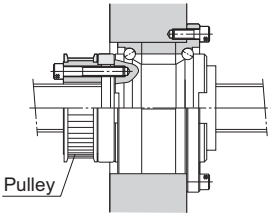

Inverted flange

Note) If the flange is to be inverted, indicate "K" in the model number. (applicable only to model BLR)

Example: BLR 2020-3.6 K UU

Symbol for inverted flange (No symbol for standard flange orientation)

[Example of Mounting Model BLR on the Table]

(1) Screw shaft free, ball screw nut fixed
(Suitable for a long table)

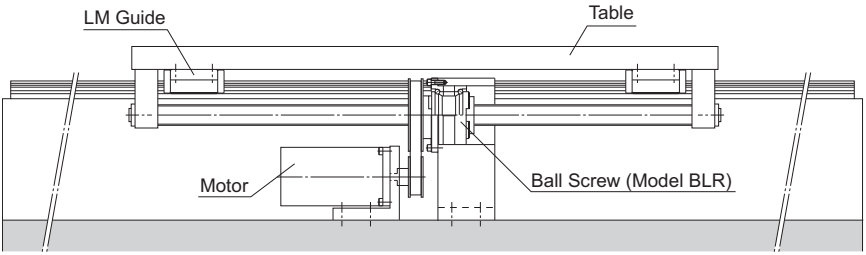

Fig.2 Example of Installation on the Table (Ball Screw Nut Fixed)

(2) Ball screw nut free, screw shaft fixed
(Suitable for a short table and a long stroke)

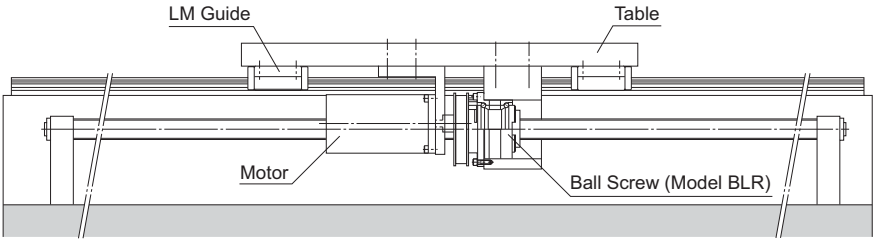

Fig.3 Example of Installation on the Table (Screw Shaft Fixed)

Precision Ball Screw/Spline

Models BNS-A, BNS, NS-A and NS

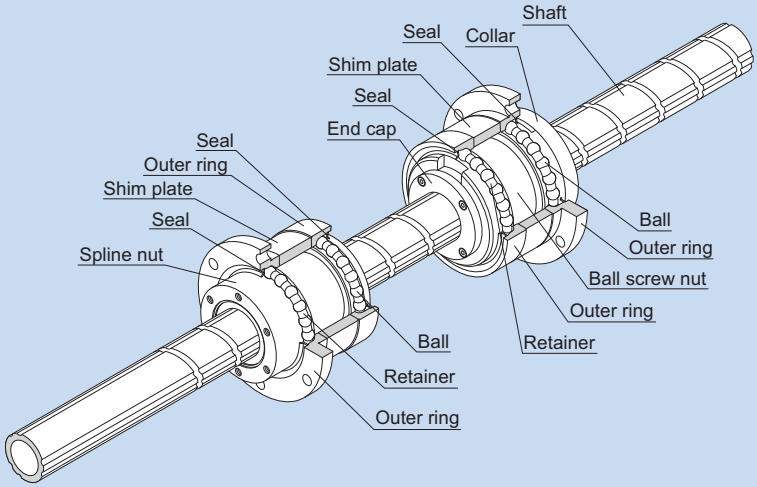

Structure and Features ▶▶▶ A15-129

Type ▶▶▶ A15-130

Service Life ▶▶▶ A15-44

Axial Clearance ▶▶▶ A15-25

Accuracy Standards ▶▶▶ A15-131

Action Patterns ▶▶▶ A15-132

Example of Assembly ▶▶▶ A15-135

Example of Using the Spring Pad ▶▶▶ A15-136

Precautions on Use ▶▶▶ A15-137

Dimensional Drawing, Dimensional Table, Example of Model Number Coding ▶▶▶ B15-172

Structure and Features

The Ball Screw/Spline contains the Ball Screw grooves and the Ball Spline groove crossing one another. The nuts of the Ball Screw and the Ball Spline have dedicated support bearings directly embedded on the circumference of the nuts.
The Ball Screw/Spline is capable of performing three (rotational, linear and spiral) modes of motion with a single shaft by rotating or stopping the spline nut.
It is optimal for machines using a combination of rotary and straight motions, such as scholar robot's Z-axis, assembly robot, automatic loader, and machining center's ATC equipment.

[Zero Axial Clearance]

The Ball Spline has an angular-contact structure that causes no backlash in the rotational direction, enabling highly accurate positioning.

[Lightweight and Compact]

Since the nut and the support bearing are integrated, highly accurate, compact design is achieved. In addition, small inertia because of the lightweight ball screw nut ensures high responsiveness.

[Easy Installation]

The Ball Spline nut is designed so that balls do not fall off even if the spline nut is removed from the shaft, making installation easy. The Ball Screw/Spline can easily be mounted simply by securing it to the housing with bolts. (For the housing's inner-diameter tolerance, H7 is recommended.)

[Smooth Motion with Low Noise]

As the Ball Screw is based on an end cap mechanism, smooth motion with low noise is achieved.

[Highly Rigid Support Bearing]

The support bearing on the Ball Screw has a contact angle of 60° in the axial direction while that on the Ball Spline has a contact angle of 30° in the moment direction, thus to provide a highly rigid shaft support.
In addition, a dedicated rubber seal is attached as standard to prevent entry of foreign materials.

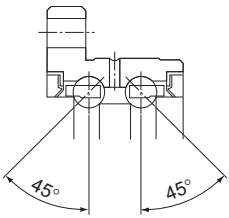

Fig.1 Structure of Support Bearing Model BNS-A

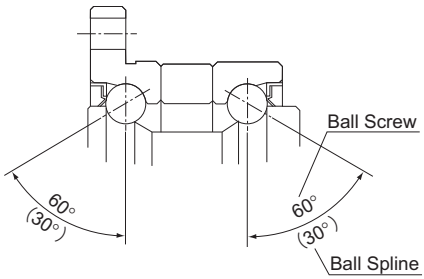

Fig.2 Structure of Support Bearing Model BNS

Type

[No Preload Type]

Model BNS-A Specification Table⇒B15-172

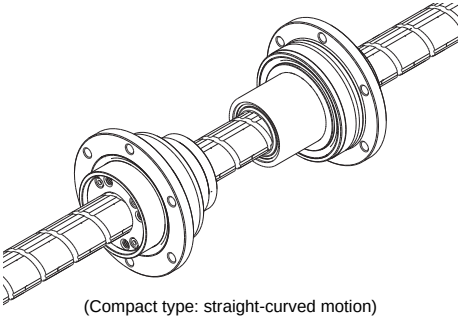

(Compact type: straight-curved motion)

Model BNS Specification Table⇒B15-174

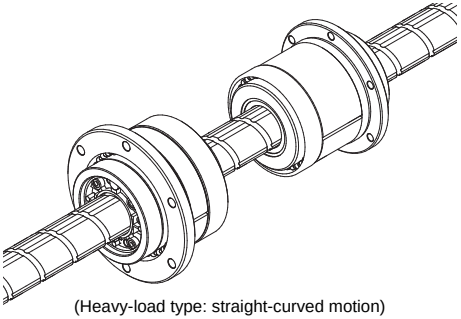

(Heavy-load type: straight-curved motion)

Model NS-A Specification Table⇒B15-176

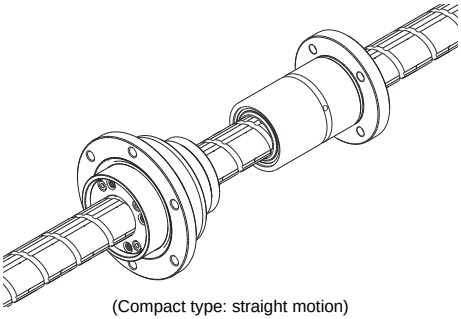

(Compact type: straight motion)

Model NS Specification Table⇒B15-178

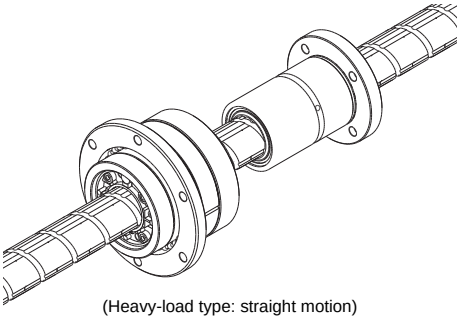

(Heavy-load type: straight motion)

Service Life

For details,see A15-44.

Axial Clearance

For details,see A15-25.

Accuracy Standards

The Ball Screw/Spline is manufactured with the following specifications.

[Ball Screw]
Axial clearance: 0 or less
Lead angle accuracy: C5
(For detailed specifications, see A15-18.)

[Ball Spline]
Clearance in the rotational direction: 0 or less (CL: light preload)
(For detailed specifications, see A3-35.)
Accuracy grade: class H
(For detailed specifications, see A3-36.)

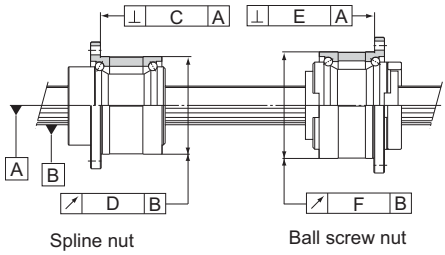

Model BNS

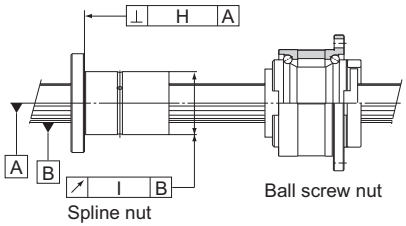

Model NS

Unit: mm

Model No.	C	D	E	F	H	I
BNS 0812 NS 0812	0.014	0.017	0.014	0.016	0.010	0.013
BNS 1015 NS 1015	0.014	0.017	0.014	0.016	0.010	0.013
BNS 1616 NS 1616	0.018	0.021	0.016	0.020	0.013	0.016
BNS 2020 NS 2020	0.018	0.021	0.016	0.020	0.013	0.016
BNS 2525 NS 2525	0.021	0.021	0.018	0.024	0.016	0.016
BNS 3232 NS 3232	0.021	0.021	0.018	0.024	0.016	0.016
BNS 4040 NS 4040	0.025	0.025	0.021	0.033	0.019	0.019
BNS 5050 NS 5050	0.025	0.025	0.021	0.033	0.019	0.019

Action Patterns

[Model BNS Basic Actions]

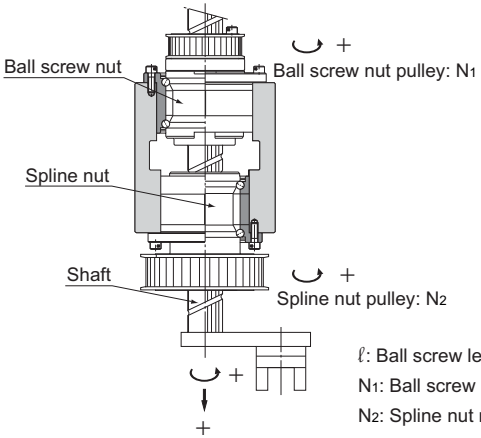

ℓ: Ball screw lead (mm)
N_1: Ball screw nut rotational speed (min^{-1})
N_2: Spline nut rotational speed (min^{-1})

Motion		Action direction	Input		Shaft motion	
			Ball screw pulley	Ball spline pulley	Vertical direction (speed)	Rotational direction (rotation speed)
1. Vertical 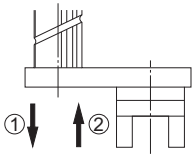	(1)	Vertical direction→down Rotational direction→0	N_1 (Forward)	0	$V=N_1 \cdot \ell$ ($N_1 \neq 0$)	0
	(2)	Vertical direction→up Rotational direction→0	$-N_1$ (Reverse)	0	$V=-N_1 \cdot \ell$ ($N_1 \neq 0$)	0
2. Rotation 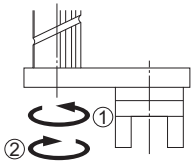	(1)	Vertical direction→0 Rotational direction→forward	N_1	N_2 (Forward)	0	N_2(Forward) ($N_1=N_2 \neq 0$)
	(2)	Vertical direction→0 Rotational direction→reverse	$-N_1$	$-N_2$ (Reverse)	0	$-N_2$(Reverse) ($-N_1=-N_2 \neq 0$)
3. Spiral 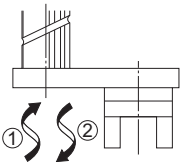	(1)	Vertical direction→up Rotational direction→forward	0	N_2 ($N_2 \neq 0$)	$V=N_2 \cdot \ell$	N_2 (Forward)
	(2)	Vertical direction→down Rotational direction→reverse	0	$-N_2$ ($-N_2 \neq 0$)	$V=-N_2 \cdot \ell$	$-N_2$ (Reverse)

[Model NS Basic Actions]

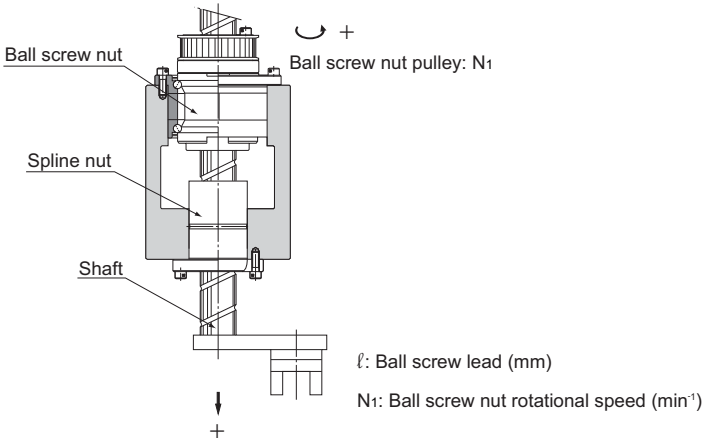

Motion		Action direction	Input	Shaft motion
			Ball screw pulley	Vertical direction (speed)
1. Vertical 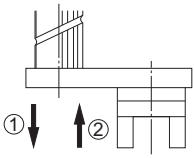	(1)	Vertical direction →down	N_1 (Forward)	$V=N_1 \cdot \ell$ ($N_1 \neq 0$)
	(2)	Vertical direction →up	$-N_1$ (Reverse)	$V=-N_1 \cdot \ell$ ($N_1 \neq 0$)

[Model BNS Extended Actions]

Motion		Action direction	Input		Shaft motion	
			Ball screw pulley	Ball spline pulley	Vertical direction (speed)	Rotational direction (rotational speed)
1. Up→down→forward →up→down→reverse 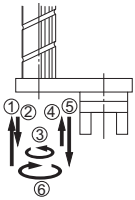	(1)	Vertical direction→up	$-N_1$ (Reverse)	0	$V=-N_1 \cdot \ell$ ($N_1 \neq 0$)	0
	(2)	Vertical direction→down	N_1 (Forward)	0	$V=N_1 \cdot \ell$ ($N_1 \neq 0$)	0
	(3)	Rotational direction→forward	N_1	N_2 (Forward)	0	N_2(Forward) ($N_1=N_2 \neq 0$)
	(4)	Vertical direction→up	$-N_1$	0	$V=-N_1 \cdot \ell$ ($N_1 \neq 0$)	0
	(5)	Vertical direction→down	N_1	0	$V=N_1 \cdot \ell$ ($N_1 \neq 0$)	0
	(6)	Rotational direction→reverse	$-N_1$	$-N_2$ (Reverse)	0	$-N_2$(Reverse) ($-N_1=N_2 \neq 0$)
2. Down→up→forward →down→up→reverse 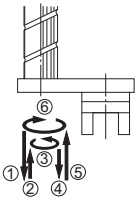	(1)	Vertical direction→down	N_1	0	$V=N_1 \cdot \ell$ ($N_1 \neq 0$)	0
	(2)	Vertical direction→up	$-N_1$	0	$V=-N_1 \cdot \ell$ ($N_1 \neq 0$)	0
	(3)	Rotational direction→forward	N_1	N_2	0	N_2 ($N_1=N_2 \neq 0$)
	(4)	Vertical direction→down	N_1	0	$V=N_1 \cdot \ell$ ($N_1 \neq 0$)	0
	(5)	Vertical direction→up	$-N_1$	0	$V=-N_1 \cdot \ell$ ($N_1 \neq 0$)	0
	(6)	Rotational direction→reverse	$-N_1$	$-N_2$	0	$-N_2$ ($-N_1=N_2 \neq 0$)
3. Down→forward →up→reverse 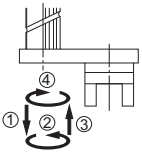	(1)	Vertical direction→down	N_1	0	$V=N_1 \cdot \ell$ ($N_1 \neq 0$)	0
	(2)	Rotational direction→forward	N_1	N_2	0	N_2 ($N_1=N_2 \neq 0$)
	(3)	Vertical direction→up	$-N_1$	0	$V=-N_1 \cdot \ell$ ($N_1 \neq 0$)	0
	(4)	Rotational direction→reverse	$-N_1$	$-N_2$	0	$-N_2$ ($-N_1=N_2 \neq 0$)
4. Down→up →reverse→forward 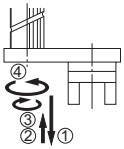	(1)	Vertical direction→down	N_1	0	$V=N_1 \cdot \ell$ ($N_1 \neq 0$)	0
	(2)	Vertical direction→up	$-N_1$	0	$V=-N_1 \cdot \ell$ ($N_1 \neq 0$)	0
	(3)	Rotational direction→reverse	$-N_1$	$-N_2$	0	$-N_2$ ($-N_1=N_2 \neq 0$)
	(4)	Rotational direction→forward	N_1	N_2	0	N_2 ($N_1=N_2 \neq 0$)

Example of Assembly

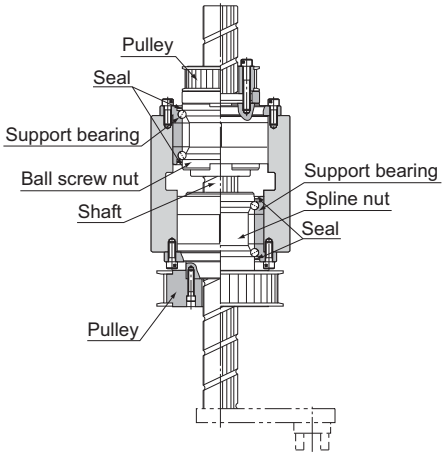

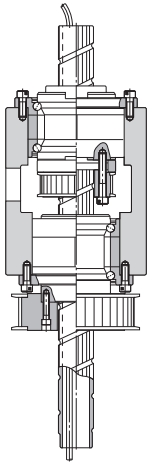

●Example of installing the ball screw nut input pulley and the spline nut input pulley, both outside the housing. The housing length is minimized.

●Example of installing the ball screw nut pulley inside the housing.

Fig.3 Example of Assembling Model BNS

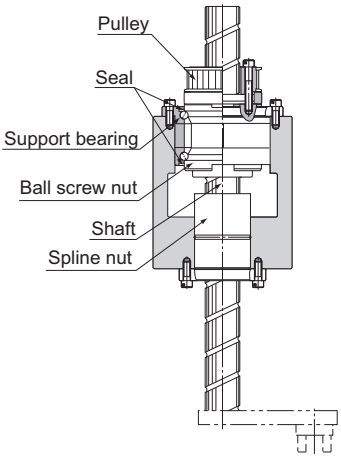

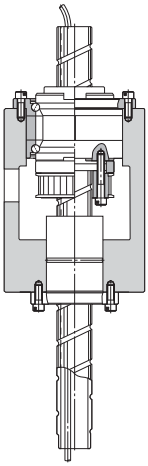

●Example of installing the ball screw nut pulley outside the housing. The housing length is minimized.

●Example of installing the ball screw nut pulley inside the housing.

Fig.4 Example of Assembling Model NS

Example of Using the Spring Pad

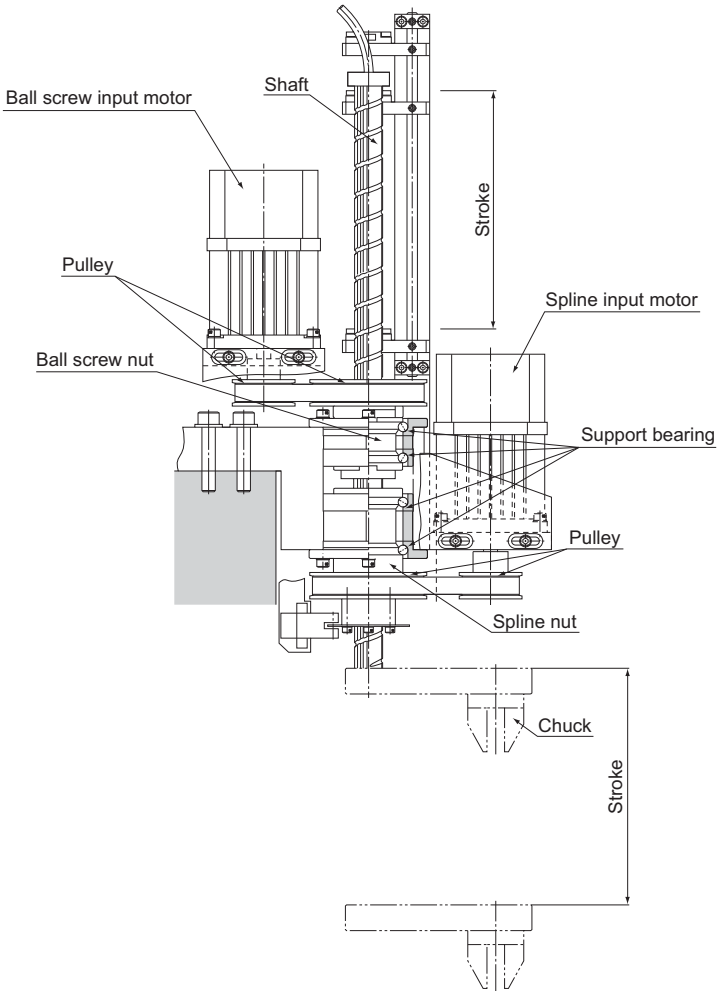

Fig.5 Example of Using Model BNS

Precautions on Use

[Lubrication]

When lubricating the Ball Screw/Spline, attach the greasing plate to the housing in advance.

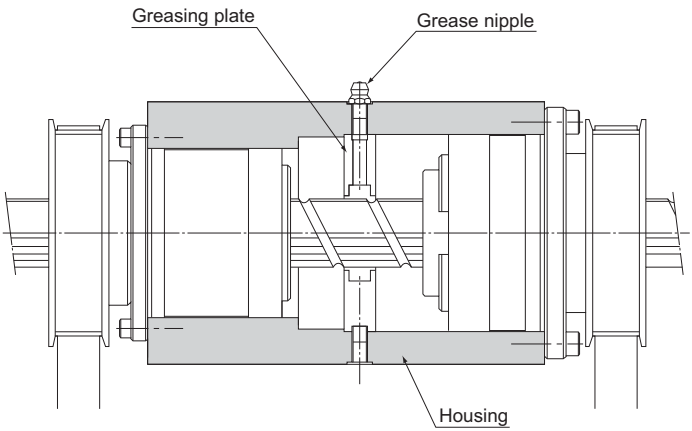

Fig.6 Lubrication Methods

Rolled Ball Screw

Models JPF, BTK, MTF, BLK/WTF, CNF and BNT

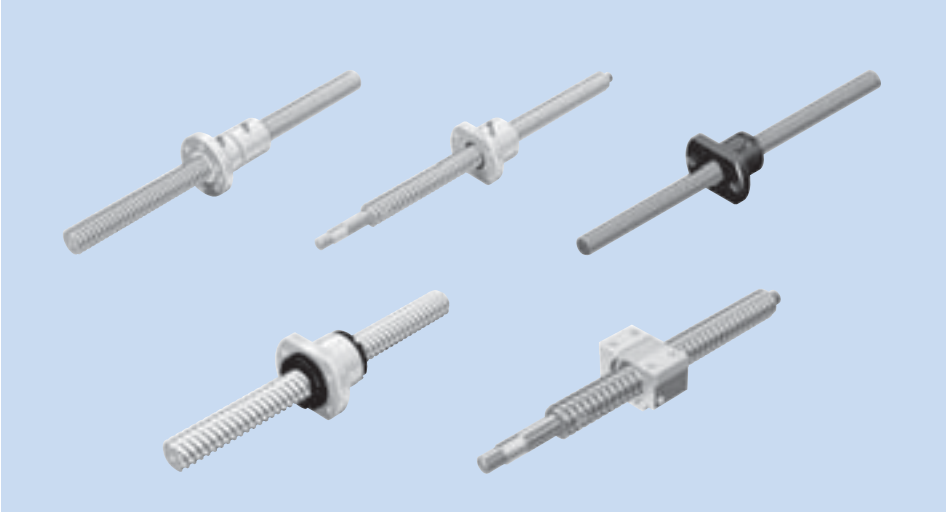

Structure and Features ▶▶▶ A15-139
Types and Features ▶▶▶ A15-140
Service Life ▶▶▶ A15-44
Axial Clearance ▶▶▶ A15-25
Accuracy Standards ▶▶▶ A15-18
Dimensional Drawing, Dimensional Table (Preload Type) ▶▶▶ B15-182
Dimensional Drawing, Dimensional Table (No Preload Type) ▶▶▶ B15-184
Model Number Coding ▶▶▶ B15-192

Structure and Features

THK Rolled Ball Screws are low priced feed screws that use a screw shaft rolled with high accuracy and specially surface-ground, instead of a thread-ground shaft used in the Precision Ball Screws.
The ball raceways of the ball screw nut are all thread-ground, thus to achieve a smaller axial clearance and smoother motion than the conventional rolled ball screw.
In addition, a wide array of types are offered as standard in order to allow optimal products to be selected according to the application.

[Achieves Lead Angle Accuracy of Class C7]

Screw shafts with travel distance error of classes C7 and C8 are also manufactured as the standard in addition to class C10 to meet a broad range of applications.

Travel distance C7: ±0.05/300 (mm)
C8: ±0.10/300 (mm)
C10: ±0.21/300 (mm)

(For maximum length of screw shaft by accuracy grade, see A15-31.)

[Achieves Roughness of the Ball Raceways of the Screw Shaft at 0.20 a or Less]

The surface of the screw shaft's ball raceways is specially ground after the shaft is rolled to ensure surface roughness of 0.20 a or less, which is equal to that of the ground thread of the Precision Ball Screw.

[The Ball Raceways of the Ball Screw Nut are Finished by Grinding]

THK finishes the ball raceways of Rolled Ball Screw nuts by grinding, just as the Precision Ball Screws, to secure the durability and the smooth motion.

[Low Price]

The screw shaft is induction-hardened or carburized after being rolled, and its surface is then specially ground. This allows the rolled Ball Screw to be priced lower than the Precision Ball Screw with a ground thread.

[Effects of high levels of dustproofing]

The ball screw nut is incorporated with a compact labyrinth seal or a brush seal. This achieves low friction, high dust-prevention effect and a longer service life of the Ball Screw.

Types and Features

[Preload Type]

Model JPF

Specification Table⇒B15-182

This model achieves a zero-backlash through a constant preloading method by shifting the phase with the central part of a simple nut as the spring structure.
The constant preload method allows the ball screw to absorb a pitch error and achieve a smooth motion.

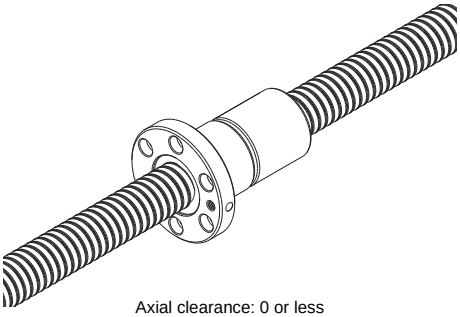

Axial clearance: 0 or less

[No Preload Type]

Model BTK

Specification Table⇒B15-184

A compact type with a round nut incorporated with a return pipe. The flange circumference is cut flat at the top and bottom, allowing the shaft center to be positioned lower.

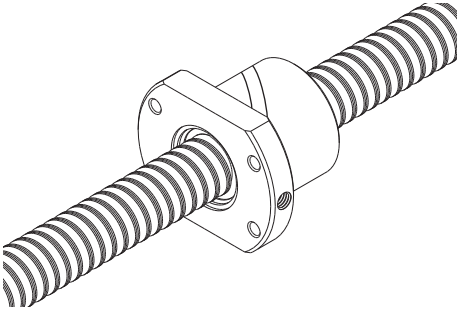

Model MTF

Specification Table⇒B15-184

A miniature type with a screw shaft diameter of ϕ6 to ϕ12 mm and a lead of 1 to 2 mm.

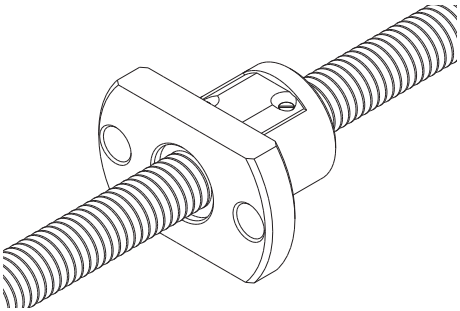

Models BLK/WTF

Specification Table⇒B15-184

Using an end-cap method, these models achieve stable motion in a high-speed rotation.

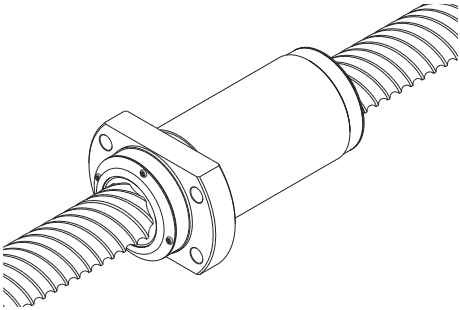

Model CNF

Specification Table⇒B15-184

With a combination of 4 rows of large-lead loaded grooves and a long nut, a long service life is achieved.

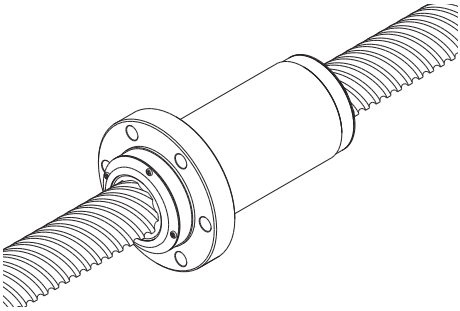

Square Ball Screw Nut Model BNT

Specification Table⇒B15-190

Since the mounting screw holes are machined on the square ball screw nut, this model can compactly be mounted on the machine without a housing.

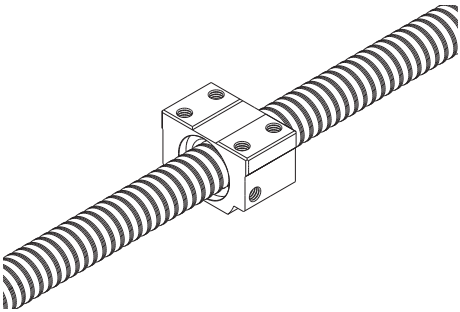

Service Life

For details,see A15-44.

Axial Clearance

For details,see A15-25.

Accuracy Standards

For details,see A15-18.

Standard Unfinished Shaft Ends Rolled Ball Screw

Model MTF

Structure and Features ▶▶▶ A15-145

Types and Features ▶▶▶ A15-145

Dimensional Drawing, Dimensional Table, Example of Model Number Coding ▶▶▶ B15-194

Structure and Features

The use of a guide plate system provides a compact design with a round outer diameter for the nut. The screw shaft is roll-molded with a high degree of precision to ensure smooth operation.

[Achieves Lead Angle Accuracy of Class C7]
The high-precision roll molding provides normal grade (±0.1/300 mm) or C7 grade (±0.05/300 mm) error in the amount of movement. The axial clearance is also small at 0.05 mm, allowing the product to be used in a wide range of applications.

[Quick delivery, low cost]
Because they are mass-produced in set lengths, screw shafts can be supplied at highly affordable prices. And because they are held in stock as shaft-nut combinations, they can be delivered quickly.

[Simple shaft end machining]
To facilitate additional machining of screw shaft ends, a section has been left unhardened. Use nut stroke ranges that are within the hardened area shown in the specification tables.

Types and Features

Model MTF

Specification Table⇒B15-194

A miniature type with a screw shaft diameter of ϕ6 to ϕ12 mm and a lead of 1 to 2 mm.

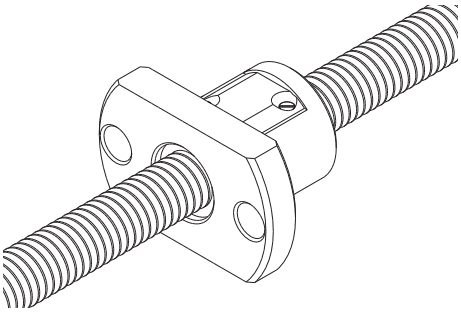

Rolled Rotary Ball Screw

Model BLR

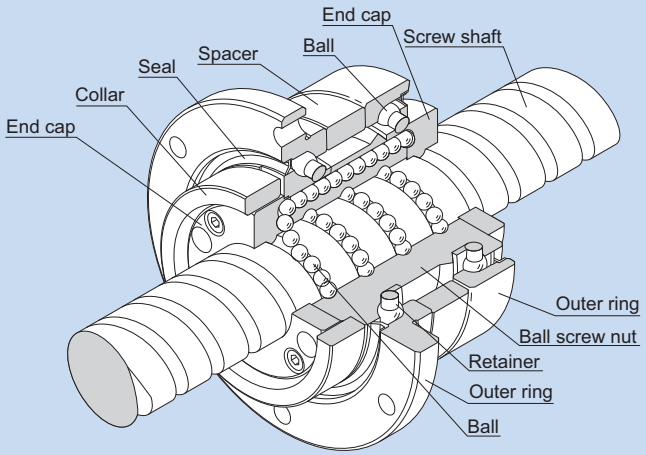

Fig.1 Structure of Large Lead Rotary Nut Ball Screw Model BLR

Structure and Features ▶▶▶ A15-147

Type ▶▶▶ A15-147

Service Life ▶▶▶ A15-44

Axial Clearance ▶▶▶ A15-25

Accuracy Standards ▶▶▶ A15-148

Example of Assembly ▶▶▶ A15-149

Dimensional Drawing, Dimensional Table, Example of Model Number Coding ▶▶▶ B15-198

Structure and Features

The Rotary Ball Screw is a rotary-nut ball screw unit that has an integrated structure consisting of a ball screw nut and a support bearing. The support bearing is an angular bearing that has a contact angle of 60°, contains an increased number of balls and achieves a large axial rigidity.
Model BLR is divided into two types: the Precision Ball Screw and the Rolled Screw Ball.

[Smooth Motion]
It achieves smoother motion than the rack-and-pinion based straight motion. Also, since the screw shaft does not rotate because of the ball screw nut drive, this model does not show skipping, produces low noise and generates little heat.

[Low Noise even in High-speed Rotation]
Model BLR produces very low noise when the balls are picked up along the end cap. In addition, the balls circulate by passing through the ball screw nut, allowing this model to be used at high speed.

[High Rigidity]
The support bearing of this model is larger than that of the screw shaft rotational type. Thus, its axial rigidity is significantly increased.

[Compact]
Since the nut and the support bearing are integrated, a highly accurate, and a compact design is achieved.

[Easy Installation]
By simply mounting this model to the housing using bolts, a ball screw nut rotating mechanism can be obtained. (For the housing's inner-diameter tolerance, H7 is recommended.)

Type

[No Preload Type]

Model BLR

Specification Table⇒B15-198

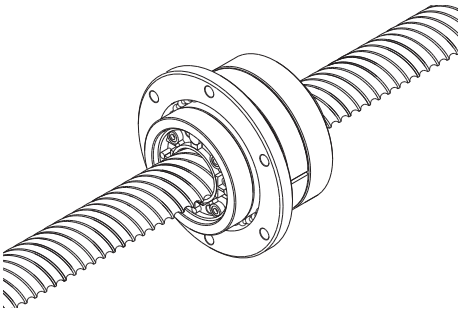

Service Life

For details,see A15-44.

Axial Clearance

For details,see A15-25.

Accuracy Standards

The accuracy of model BLR is compliant with the JIS standard (JIS B 1192-1997) except for the radial runout of the circumference of the ball screw nut from the screw axis (D) and the perpendicularity of the flange-mounting surface against the screw axis (C).

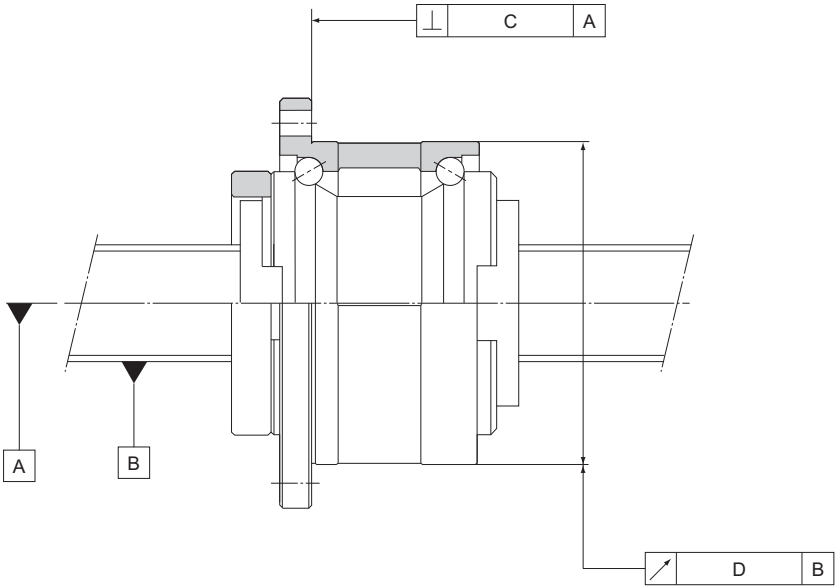

Unit: mm

Lead angle accuracy	C7, C8, C10	
Accuracy grades	C10	
Model No.	C	D
BLR 1616	0.035	0.065
BLR 2020	0.035	0.065
BLR 2525	0.035	0.065
BLR 3232	0.035	0.065
BLR 3636	0.036	0.066
BLR 4040	0.046	0.086
BLR 5050	0.046	0.086

Example of Assembly

[Example of Mounting Ball Screw Nut Model BLR]

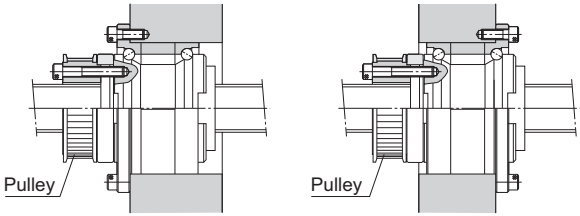

Standard installation method　　Inverted flange

Note) If the flange is to be inverted, indicate "K" in the model number. (applicable only to model BLR)

Example: BLR 2020-3.6 K UU
Symbol for invert
(No symbol for standard flange orientation)

[Example of Mounting Model BLR on the Table]

(1) Screw shaft free, ball screw nut fixed
(Suitable for a long table)

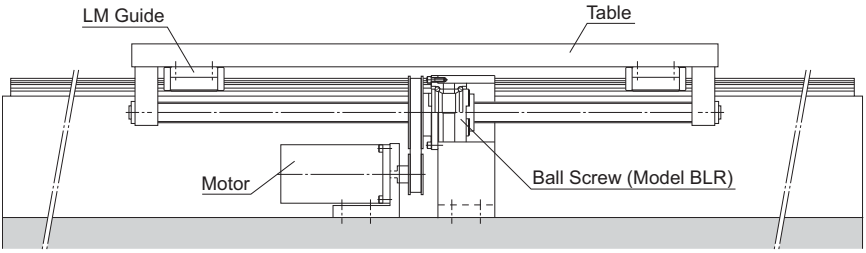

Fig.2 Example of Installation on the Table (Ball Screw Nut Fixed)

(2) Ball screw nut free, screw shaft fixed
(Suitable for a short table and a long stroke)

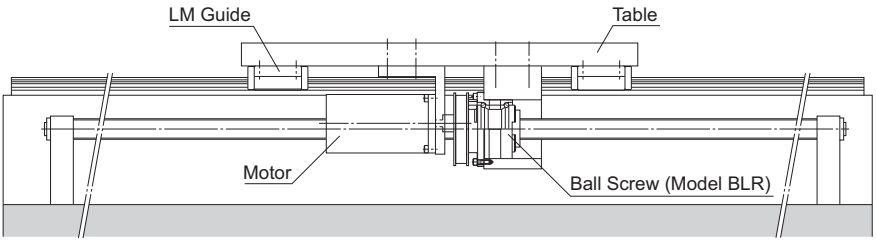

Fig.3 Example of Installation on the Table (Screw Shaft Fixed)

Ball Screw

Ball Screw Peripherals

Support Unit

Models EK, BK, FK, EF, BF and FF

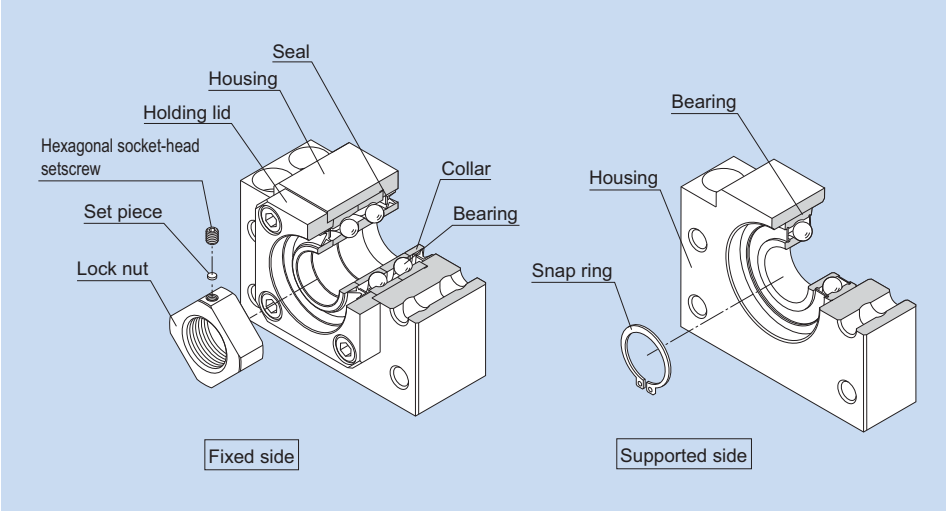

Fig.1 Structure of the Support Unit

Structure and Features

The Support Unit comes in six types: models EK, FK, EF, and FF, which are standardized for the standard Ball Screw assembly provided with the finished shaft ends, and models BK and BF, which are standardized for ball screws in general.
The Support Unit on the fixed side contains a JIS Class 5-compliant angular bearing provided with an adjusted preload. The miniature type Support Unit models EK/FK 4, 5, 6 and 8, in particular, incorporate a miniature bearing with a contact angle of 45° developed exclusively for miniature Ball Screws. This provides stable rotational performance with a high rigidity and an accuracy.
The Support Unit on the supported side uses a deep-groove ball bearing.
The internal bearings of the Support Unit models EK, FK and BK contain an appropriate amount of lithium soap-group grease that is sealed with a special seal. Thus, these models are capable of operating over a long period.

[Uses the Optimal Bearing]

To ensure the rigidity balance with the Ball Screw, the Support Unit uses an angular bearing (contact angle: 30°; DF configuration) with a high rigidity and a low torque. Miniature Support Unit models EK/FK 4, 5, 6 and 8 are incorporated with a miniature angular bearing with a contact angle of 45° developed exclusively for miniature Ball Screws. This bearing has a greater contact angle of 45° and an increased number of balls with a smaller diameter. The high rigidity and accuracy of the miniature angular bearing provides the stable rotational performance.

[Support Unit Shapes]

The square and round shapes are available for the Support Unit to allow the selection according to the intended use.

[Compact and Easy Installation]

The Support Unit is compactly designed to accommodate the space in the installation site. As the bearing is provided with an appropriately adjusted preload, the Support Unit can be assembled with a Ball Screw unit with no further machining. Accordingly, the required man-hours in the assembly can be reduced and the assembly accuracy can be increased.

Type

[For the Fixed Side]

Square Type Model EK

Specification Table⇒B15-204

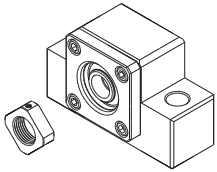

(Inner diameter: ϕ4 to ϕ20)

Square Type Model BK

Specification Table⇒B15-206

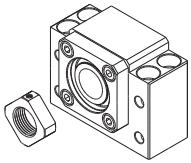

(Inner diameter: ϕ10 to ϕ40)

Round Type Model FK

Specification Table⇒B15-208

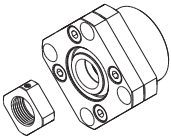

(Inner diameter: ϕ4 to ϕ30)

[For the Supported Side]

Square Type Model EF

Specification Table⇒B15-212

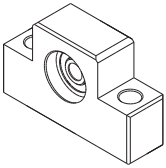

(Inner diameter: ϕ6 to ϕ20)

Square Type Model BF

Specification Table⇒B15-214

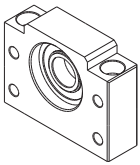

(Inner diameter: ϕ8 to ϕ40)

Round Type Model FF

Specification Table⇒B15-216

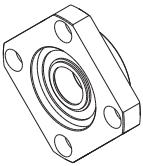

(Inner diameter: ϕ6 to ϕ30)

Types of Support Units and Applicable Screw Shaft Outer Diameters

Inner diameter of fixed-side Support Unit (mm)	Inner diameter of supported-side Support Unit (mm)	Applicable Model No. of fixed-side Support Unit	Applicable model No. of the supported side Support Unit	Type BNK with Unfinished Shaft Ends (Applicable Model No.)	Recommended Shapes of Shaft Ends (Applicable Shaft Outer Diameter ϕD)	
					Shaft End H (mm)	Shaft End J (mm)
4	—	EK 4 FK 4	—	BNK0401 BNK0501	ϕ6	———
5	—	EK 5 FK 5	—	BNK0601	ϕ8	———
6	6	EK 6 FK 6	EF 6 FF 6	BNK0801 BNK0802 BNK0810	ϕ8	———
8	6	EK 8 FK 8	EF 8 FF 6	BNK1002	ϕ12	———
10	8	EK 10 FK 10 BK 10	EF 10 FF 10 BF 10	BNK1004 BNK1010 BNK1202 BNK1205 BNK1208	ϕ14 ϕ15	ϕ14 ϕ15
12	10	EK 12 FK 12 BK 12	EF 12 FF 12 BF 12	BNK1402 BNK1404 BNK1408 BNK1510 BNK1520 BNK1616	ϕ16 ϕ18	ϕ16 ϕ18
15	15	EK 15 FK 15	EF 15 FF 15	BNK2010 BNK2020	ϕ20 ϕ25	———
		BK 15	BF 15	———	———	ϕ20
17	17	BK 17	BF 17	———	———	ϕ25
20	20	EK 20 FK 20	EF 20 FF 20	BNK2520	ϕ28 ϕ30 ϕ32	———
		BK 20	BF 20	———	———	ϕ28 ϕ30 ϕ32
25	25	FK 25	FF 25	———	ϕ36	———
		BK 25	BF 25	———	———	ϕ36
30	30	FK 30	FF 30	———	ϕ40	ϕ40
		BK 30	BF 30	———		
35	35	BK 35	BF 35	———	———	ϕ45
40	40	BK 40	BF 40	———	———	ϕ50 ϕ55

Note1) For Recommended Shapes of Shaft Ends H, J, and K; refer to pages B15-218 to B15-223.
Note2) The Supports Units in this table apply only to those Ball Screw models with recommended shaft ends shapes H, J and K, indicated on A15-160.

Model Numbers of Bearings and Characteristic Values

Angular ball bearing on the fixed side					Deep-groove ball bearing on the supported side			
Support Unit model No.	Bearing model No.	Axial direction			Support Unit model No.	Bearing model No.	Radial direction	
		Basic dynamic load rating Ca (kN)	Note) Permissi-ble load (kN)	Rigidity (N/μm)			Basic dynamic load rating C(kN)	Basic static load rating C_0(kN)
EK 4 FK 4	AC4-12P5	0.93	1.1	27	—	—	—	—
EK 5 FK 5	AC5-14P5	1	1.24	29	—	—	—	—
EK 6 FK 6	AC6-16P5	1.38	1.76	35	EF 6 FF 6	606ZZ	2.19	0.87
EK 8 FK 8	79M8DF GMP5	2.93	2.15	49	EF 8	606ZZ	2.19	0.87
EK 10 FK 10 BK 10	7000HTDF GMP5	6.08	3.1	65	EF 10 FF 10 BF 10	608ZZ	3.35	1.4
EK 12 FK 12 BK 12	7001HTDF GMP5	6.66	3.25	88	EF 12 FF 12 BF 12	6000ZZ	4.55	1.96
EK 15 FK 15 BK 15	7002HTDF GMP5	7.6	4	100	EF 15 FF 15 BF 15	6002ZZ	5.6	2.84
BK 17	7203HTDF GMP5	13.7	5.85	125	BF 17	6203ZZ	9.6	4.6
EK 20 FK 20	7204HTDF GMP5	17.9	9.5	170	EF 20 FF 20	6204ZZ	12.8	6.65
BK 20	7004HTDF GMP5	12.7	7.55	140	BF 20	6004ZZ	9.4	5.05
FK 25 BK 25	7205HTDF GMP5	20.2	11.5	190	FF 25 BF 25	6205ZZ	14	7.85
FK 30 BK 30	7206HTDF GMP5	28	16.3	195	FF 30 BF 30	6206ZZ	19.5	11.3
BK 35	7207HTDF GMP5	37.2	21.9	255	BF35	6207ZZ	25.7	15.3
BK 40	7208HTDF GMP5	44.1	27.1	270	BF 40	6208ZZ	29.1	17.8

Note) "Permissible load" indicates the static permissible load.

Example of Installation

[Square Type Support Unit]

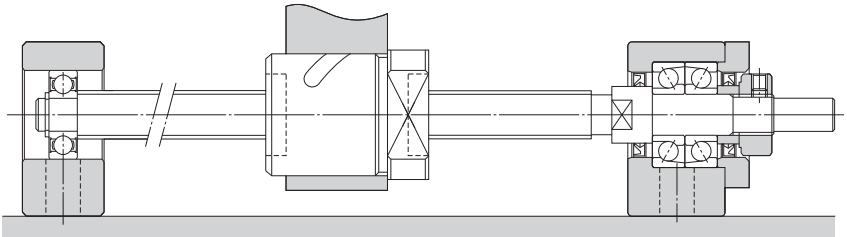

Fig.2 Example of Installing a Square Type Support Unit

[Round Type Support Unit]

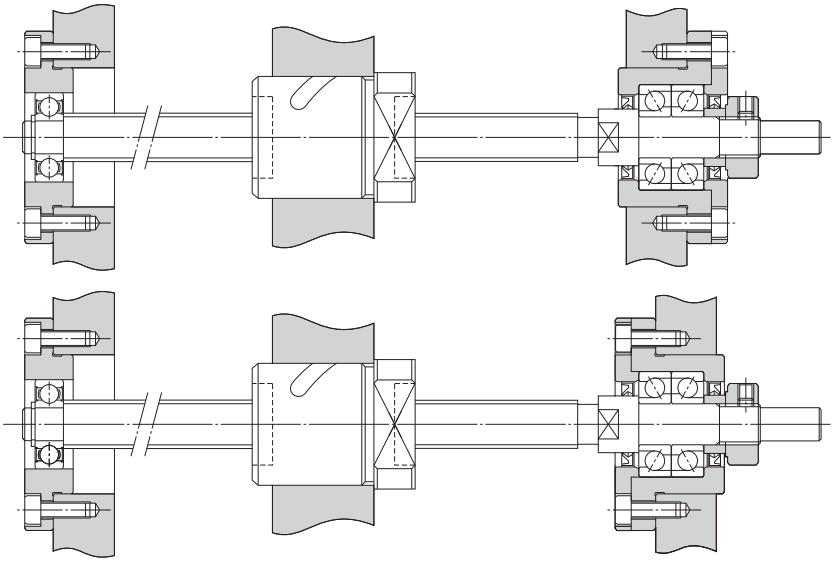

Fig.3 Example of Installing a Round Type Support Unit

Mounting Procedure

[Installing the Support Unit]

(1) Install the fixed side Support Unit with the screw shaft.

(2) After inserting the fixed side Support Unit, secure the lock nut using the fastening set piece and the hexagonal socket-head setscrews.

(3) Attach the supported side bearing to the screw shaft and secure the bearing using the snap ring, and then install the assembly to the housing on the supported side.

Note1) Do no disassemble the Support Unit.
Note2) When inserting the screw shaft to the Support Unit, take care not to let the oil seal lip turn outward.
Note3) When securing the set piece with a hexagonal socket-head setscrew, apply an adhesive to the hexagonal socket-head setscrew before tightening it in order to prevent the screw from loosening. If planning to use the product in a harsh environment, it is also necessary to take a measure to prevent other components/parts from loosening. Contact THK for details.

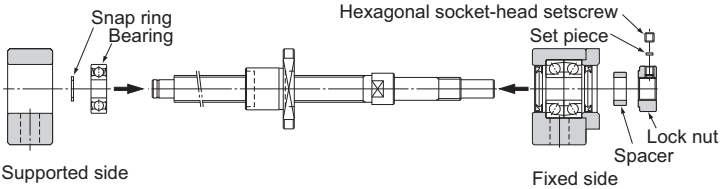

[Installation onto the Table and the Base]

(1) If using a bracket when mounting the ball screw nut to the table, insert the nut into the bracket and temporarily fasten it.

(2) Temporarily fasten the fixed side Support Unit to the base.
In doing so, press the table toward the fixed side Support Unit to align the axial center, and adjust the table so that it can travel freely.

- If using the fixed side Support Unit as the reference point, secure a clearance between the ball screw nut and the table or inside the bracket when making adjustment.
- If using the table as the reference point, make the adjustment either by using the shim (for a square type Support Unit), or securing the clearance between the outer surface of the nut and the inner surface of the mounting section (for a round type Support Unit).

(3) Press the table toward the fixed-side Support Unit to align the axial center. Make the adjustment by reciprocating the table several times so that the nut travels smoothly throughout the whole stroke, and temporarily secure the Support Unit to the base.

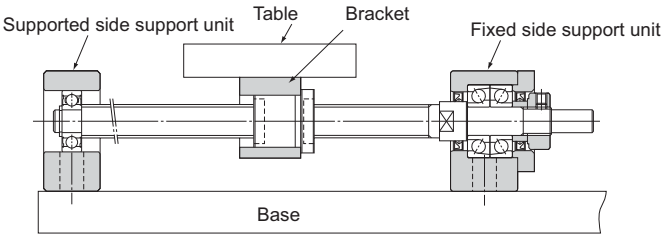

[Checking the Accuracy and Fully Fastening the Support Unit]

While checking the runout of the ball screw shaft end and the axial clearance using a dial gauge, fully fasten the ball screw nut, the nut bracket, the fixed side Support Unit and the supported-side Support Unit, in this order.

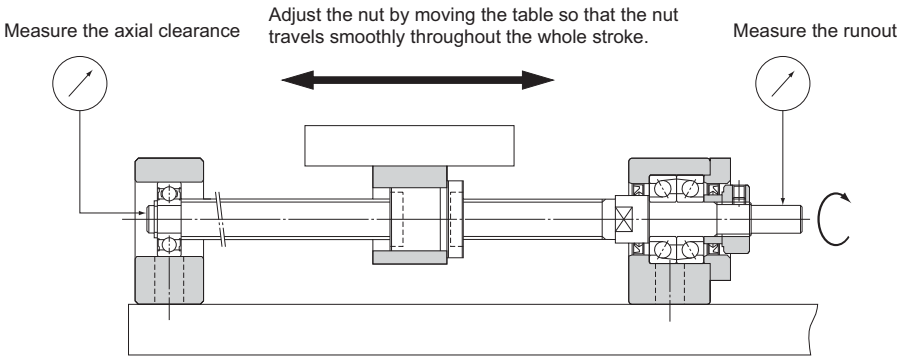

[Connection with the Motor]

(1) Mount the motor bracket to the base.

(2) Connect the motor and the ball screw using a coupling.

Note) Make sure the mounting accuracy is maintained.

(3) Thoroughly perform the break-in for the system.

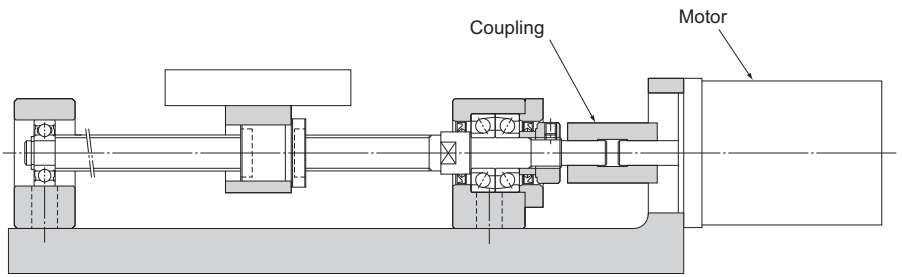

Types of Recommended Shapes of the Shaft Ends

To ensure speedy estimates and manufacturing of Ball Screws, THK has standardized the shaft end shapes of the screw shafts. The recommended shapes of shaft ends consist of shapes H, K and J, which allow standard Support Units to be used.

Mounting method	Symbol for shaft end shape		Shape	Supported Support Unit
Fixed	H J	H1	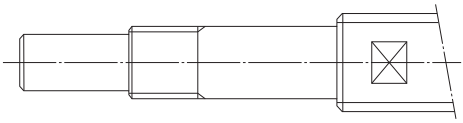	FK EK
		J1		BK
		H2	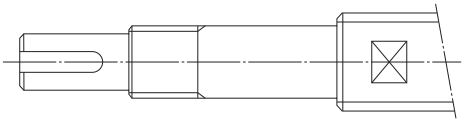	FK EK
		J2		BK
		H3	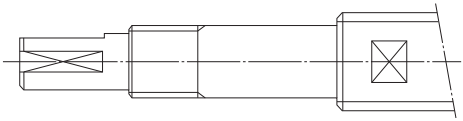	FK EK
		J3		BK
Sup-ported	K		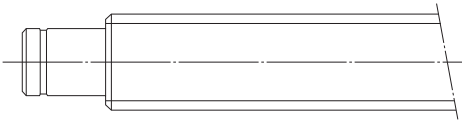	FF EF BF

Nut Bracket

Model MC

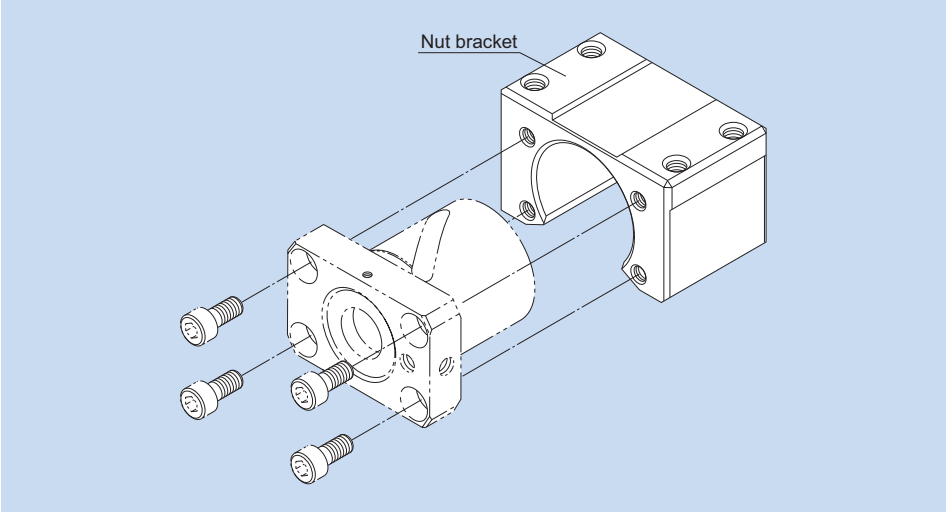

Fig.1 Structure of the Nut Bracket

Structure and Features

The Nut Bracket is standardized for the standard Ball Screw assembly provided with finished shaft ends. It is designed to be secured directly on the table with bolts. Since the height is low, it can be mounted on the table only using bolts.

Type

Nut Bracket Model MC

Specification Table⇒B15-224

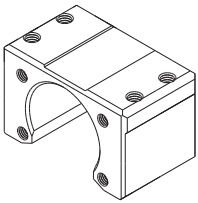

Lock Nut

Model RN

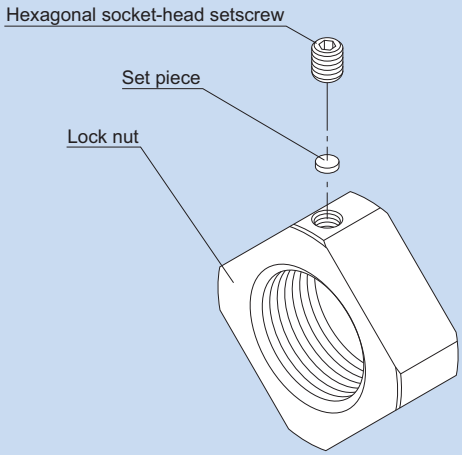

Fig.1 Structure of the Lock Nut

Structure and Features

The Lock Nut for the Ball Screws is capable of fastening the screw shaft and the bearing with a high accuracy.
The provided hexagonal socket-head setscrew and the set piece prevent the Lock Nut from loosening and ensure firm fastening. The Lock Nut comes in various types ranging from model M4 to model M40.

Type

Lock Nut Model RN

Specification Table⇒B15-226

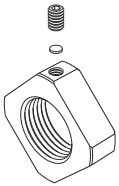

Ball Screw

Options

Lubrication

To maximize the performance of the Ball Screw, it is necessary to select a lubricant and a lubrication method according to the conditions.
For types of lubricants, characteristics of lubricants and lubrication methods, see the section on “Accessories for Lubrication” on A24-2.
Also, QZ Lubricator is available as an optional accessory that significantly increases the maintenance interval.

Corrosion Resistance (Surface Treatment, etc.)

Depending on the service environment, the Ball Screw requires corrosion resistance treatment or a different material. For details of corrosion resistance treatment and material change, contact THK. (see A0-18)

Contaminaton Protection

Dust and foreign material that enter the Ball Screw may cause accelerated wear and breakage, as with roller bearings. Therefore, where contamination by dust or foreign material (e.g., cutting chips) is a possbility, screw shafts must always be completely covered by contamination protection accessories (e.g., bellows, screw cover, wiper ring).
If the Ball Screw is used in an atmosphere free from foreign material but with suspended dust, a labyrinth seal (for precision Ball Screws) with symbol RR and a brush seal (for rolled Ball Screws) with symbol ZZ can be used as contamination protection accessories.
The labyrinth seal is designed to maintain a slight clearance between the seal and the screw shaft raceway so that torque does not develop and no heat is generated, though its effect in contamination protection is limited.
With Ball Screws except the large lead and super lead types, there is no difference in nut dimensions between those with and without a seal.
With the wiper ring, special resin with high wear resistance and low dust generation removes foreign materials while closely contacting the circumference of the ball screw shaft and the screw thread. It is capable of preventing foreign materials from entering the Ball Screw even in a severe environment.

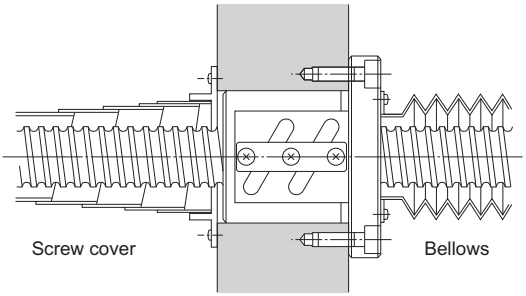

Fig.1 Dust cover

QZ Lubricator

●For the supported models and the ball screw nut dimension with QZ attached, see B15-228 to B15-235.

QZ Lubricator feeds a right amount of lubricant to the raceway of the ball screw shaft. This allows an oil film to be constantly formed between the balls and the raceway, improves lubricity and significantly extends the lubrication maintenance interval.
The structure of QZ Lubricator consists of three major components: (1) a heavily oil-impregnated fiber net (stores the lubricant), (2) a high-density fiber net (applies the lubricant to the raceway) and (3) an oil-control plate (adjusts the oil flow). The lubricant contained in the QZ Lubricator is fed by the capillary phenomenon, which is used also in felt pens and many other products.

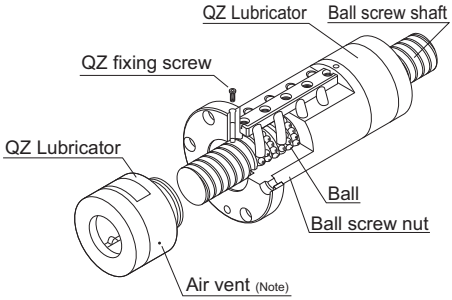

Appearance Drawing

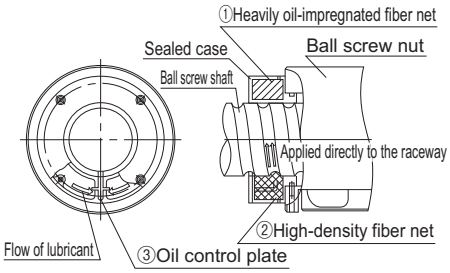

Structural Drawing

[Features]

- Since it supplements an oil loss, the lubrication maintenance interval can be significantly extended.
- Since the right amount of lubricant is applied to the ball raceway, an environmentally friendly lubrication system that does not contaminate the surroundings is achieved.

Note) QZ Lubricator has a vent hole. Do not block the vent hole with grease or the like.

● Significantly extended maintenance interval

Since QZ Lubricator continuously feeds a lubricant over a long period, the maintenance interval can be significantly extended.

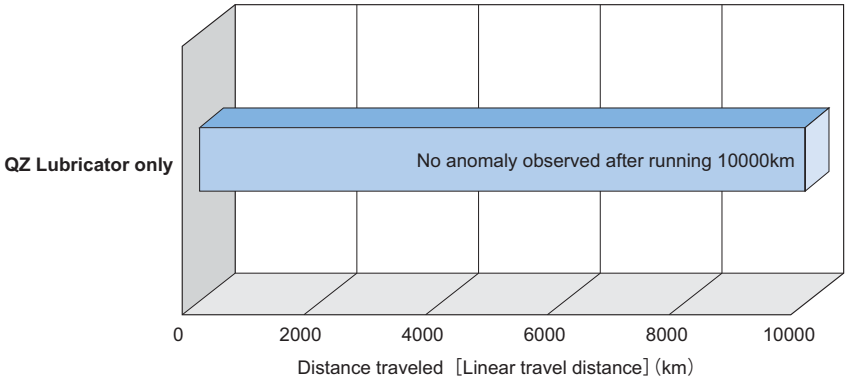

[Test conditions]

Item	Description
Ball Screw	BIF2510
Maximum rotational speed	2500min^{-1}
Maximum speed	25m/min
Stroke	500mm
Load	Internal preload only

● Environmentally friendly lubrication system

Since QZ Lubricator feeds the right amount of lubricant directly to the raceway, the lubricant can effectively be used without waste.

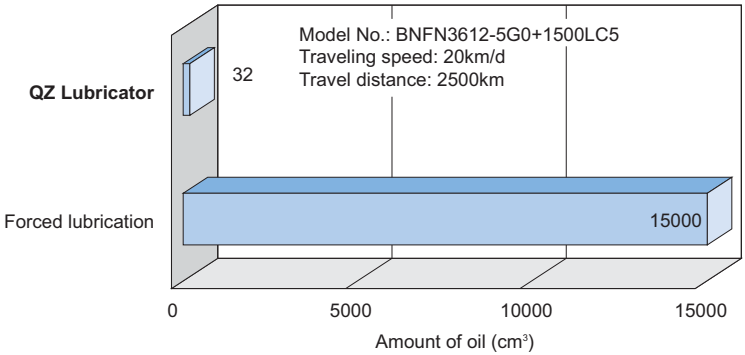

QZ Lubricator + THK AFA Grease
32cm^3
(QZ Lubricator attached to both ends of the ball screw nut)

Compared

Forced lubrication
0.25cm^3/3min×24h×125d
=15000cm^3

Reduced to approx. $\frac{1}{470}$

Wiper Ring W

●For the supported models and the ball screw nut dimension with Wiper ring W attached, see B15-228 to B15-235.

With the wiper ring W, special resin with high wear resistance and low dust generation removes foreign material and prevents foreign material from entering the ball screw nut while elastically contacting the circumference of the ball screw shaft and the screw thread.

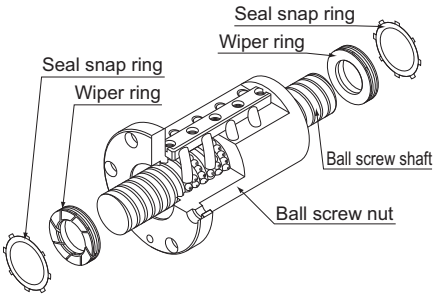

Appearance Drawing

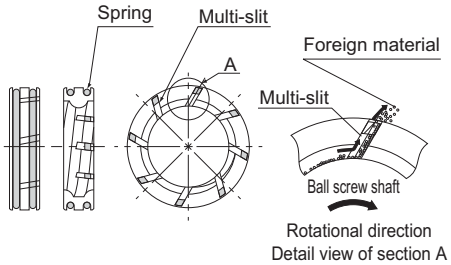

Structural Drawing

[Features]

- A total of eight slits on the circumference remove foreign materials in succession, and prevent entrance of foreign material.
- Contacts the ball screw shaft to reduce the flowing out of grease.
- Contacts the ball screw shaft at a constant pressure level using a spring, thus to minimize the heat generation.
- Since the material is highly resistant to the wear and the chemicals, its performance will not easily be deteriorated even if it is used over a long period.

● Test in an environment exposed to contaminated environment

[Test conditions]

Item	Description
Model No.	BIF3210–5G0+1500LC5
Maximum rotational speed	1000min^{-1}
Maximum speed	10m/min
Maximum circumferential speed	1.8m/s
Time constant	60ms
Dowel	1s
Stroke	900mm
Load (through internal load)	1.31kN
Grease	THK AFG Grease 8cm^3 (Initial lubrication to the ball screw nut only.)
Foundry dust	FCD400 average particle diameter: 250µm
Volume of foreign material per shaft	5g/h

[Test result]

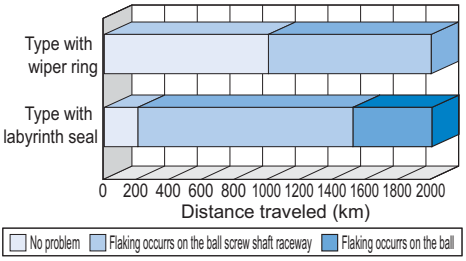

- Type with wiper ring
  Slight flaking occurred in the ball screw shaft at travel distant of 1,000 km.
- Type with labyrinth seal
  Flaking occurred throughout the circumference of the screw shaft raceway at travel distance of 200 km.
  Flaking occurred on the balls after traveling 1,500 km.

Change in the ball after traveling 2000 km

(1) Type with wiper ring	(2) Type with labyrinth seal
●Discolored, but no breakage	●Flaking occurs

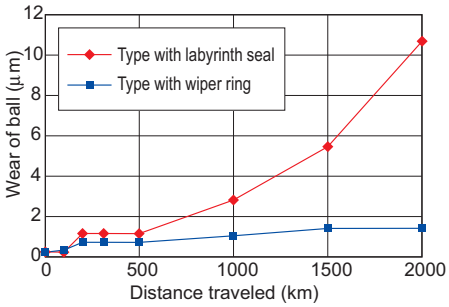

- Type with wiper ring
  Wear of balls at a travel distance of 2,000 km: 1.4 µm.
- Type with labyrinth seal
  Starts to be worn rapidly after 500 km, and the ball wear amount at the travel distance of 2,000 km: 11 µm

● Heat Generation Test

[Test conditions]

Item	Description
Model No.	BLK3232–3.6G0+1426LC5
Maximum rotational speed	1000min^{-1}
Maximum speed	32m/min
Maximum circumferential speed	1.7m/s
Time constant	100ms
Stroke	1000mm
Load (through internal load)	0.98kN
Grease	THK AFG Grease 5cm^3 (contained in the ball screw nut)

[Test result]

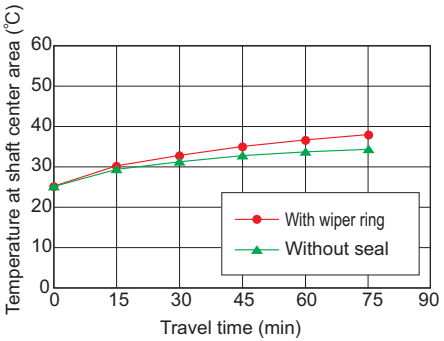

Unit: ℃

Item	With wiper ring	Without seal
Heat generation temperature	37.1	34.5
Temperature rise	12.2	8.9

Specifications of the Bellows

Bellows are available as a contamination protection accessory. Use this specification sheet.

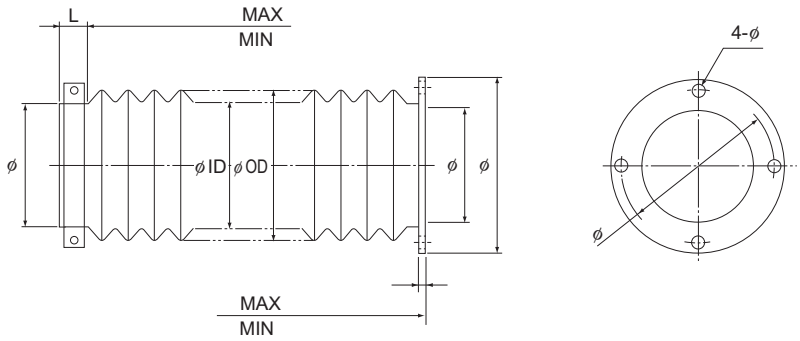

(Band type) (Flange type)

Specifications of the Bellows

Supported Ball Screw models:

Dimensions of the Bellows

Stroke:( ) mm MAX:( ) mm MIN:( ) mm

Permissible outer diameter:(øOD) Desired inner diameter:(øID)

How It Is Used

Installation direction:(horizontal, vertical, slant) Speed: ( )mm/sec. mm/min.

Motion:(reciprocation, vibration)

Conditions

Resistance to oil and water: (necessary, unnecessary) Oil name ( )

Chemical resistance: Name ( ) × ( ) %

Location: (indoor, outdoor)

Remarks:

Number of Units To Be Manufactured:

Method for Mounting the Ball Screw Shaft

Fig.1 to Fig.4 show the representative mounting methods for the screw shaft.
The permissible axial load and the permissible rotational speed vary with mounting methods for the screw shaft. Therefore, it is necessary to select an appropriate mounting method according to the conditions.

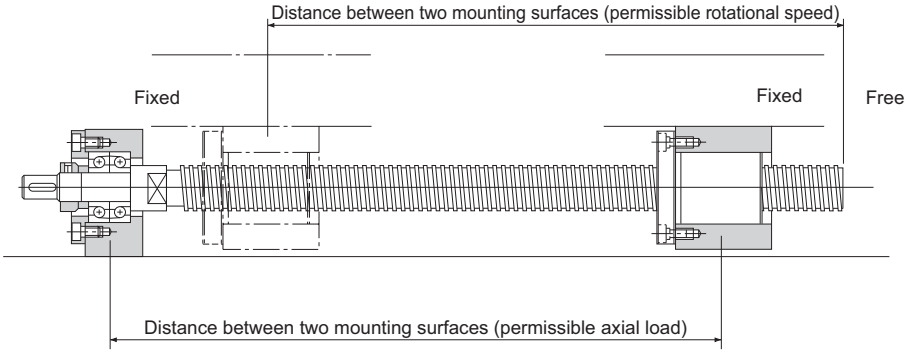

Fig.1 Screw Shaft Mounting Method: Fixed - Free

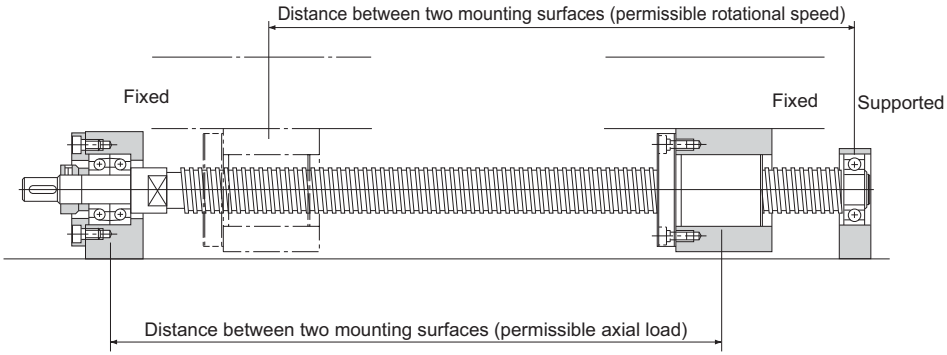

Fig.2 Screw Shaft Mounting Method: Fixed - Supported

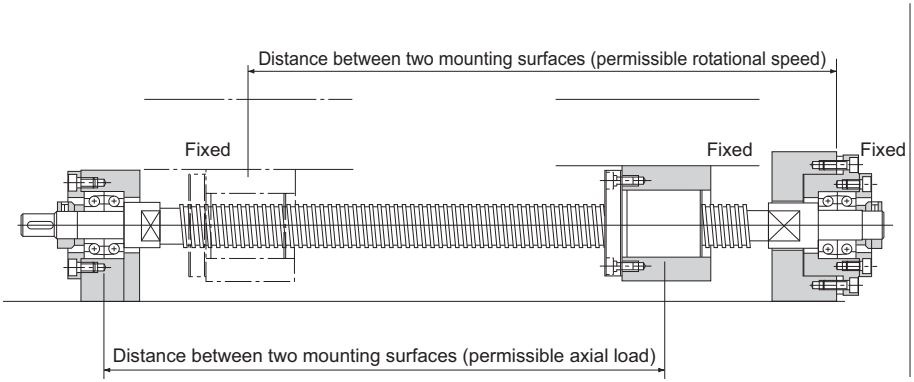

Fig.3 Screw Shaft Mounting Method: Fixed - Fixed

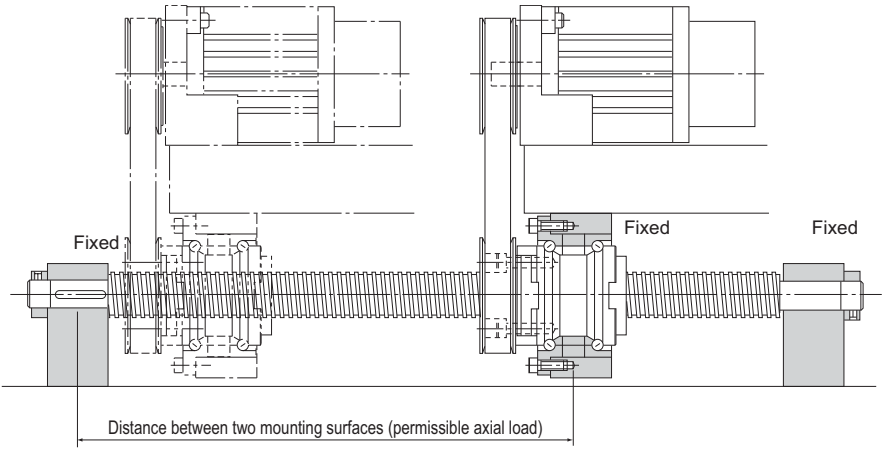

Fig.4 Screw Shaft Mounting Method for Rotary Nut Ball Screw: Fixed - Fixed

Maintenance Method

Amount of Lubricant

If the amount of the lubricant to the Ball Screw is insufficient, it may cause a lubrication breakdown, and if it is excessive, it may cause heat to be generated and the resistance to be increased. It is necessary to select an amount that meets the conditions.

[Grease]
The feed amount of grease is generally approximately one third of the spatial volume inside the nut.

[Oil]
Table 1 shows a guideline for the feed amount of oil.
Note, that the amount varies according to the stroke, the oil type and the conditions (e.g., suppressed heat generation).

Table1 Guideline for the Feed Amount of Oil
(Interval: 3 minutes)

Shaft diameter (mm)	Amount of lubricant (cc)
4 to 8	0.03
10 to 14	0.05
15 to 18	0.07
20 to 25	0.1
28 to 32	0.15
36 to 40	0.25
45 to 50	0.3
55 to 63	0.4
70 to 100	0.5

Model Number Coding

The model number configuration for ball screws differs depending on the type.Table1 Refer to the corresponding configuration example shown in Table3.
THK can also provide shaft end shapes matched to support units. These can also be denoted in the symbols, which should be used for this purpose.

[Precision ball screw types and sample model number configurations]

Table1

	Model No.		Shaft end shape	Model number coding
Precision	SBN, SBK, HBN, BIF, BNFN, MDK, MBF, BNF, DIK, DKN, BLW, DK, MDK, BLK, WGF, BNT		Fixed Side : H, J Supported Side : K	[1]
	Standard Stock Unfinished Shaft Ends A	MBF, MDK, BNFN, BNF, BIF		[2]
	Standard Stock Unfinished Shaft Ends B	BNFN, BNF, BIF		
	Standard Stock Finished Shaft Ends	BNK	Y	[3]
	Rotary Ball Screw	BLR, DIR	Fixed Side : H, J Supported Side : K	[4]
	Ball Screw/Spline	BNS-A, BNS, NS-A, NS	—	[5]

[Rolled ball screw types and sample model number configurations]

Table2

	Model No.		Shaft end shape	Model number coding
Rolled	Standard Stock Unfinished Shaft Ends	MTF	Fixed Side : H, J Supported Side : K	[6]
	Ball screw nut and screw shaft combination products	JPF, BTK, MTF, BLK, WTF, CNF, BNT		[7]
	Rotary Ball Screw	BLR		[8]
	Standalone screw shafts	TS		[9]
	Standalone ball screw nuts	BTK, BLK, WTF, CNF, BNT, BLR	—	

[Support unit, nut bracket and lock nut types and sample model number configurations]

Table3

Model No.		Shaft end shape	Model number coding
Support Unit	EK, BK, FK, EF, BF, FF	—	[10]
Nut brackets for BNK	MC	—	
Lock Nut	RN	—	

[1 Precision Ball Screw]

● **Models SBN, SBK, HBN, BIF, BNFN, MDK, MBF, BNF, DIK, DKN, BLW, DK, MDK, BLK, WGF and BNT**

BNFN 20 05 L -5 RR G0 + 620L C5 - H1K

- BNFN: Model No.
- 20: Screw shaft outer diameter (in mm)
- 05: Lead (in mm)
- L: Threading direction (No symbol: right-hand thread L: left-hand thread RL: Right and left hand thread)
- -5: No. of circuits (Rows x turns)
- RR: Seal symbol (Labyrinth seal attached to both ends)
- G0: Symbol for clearance in the axial direction
- 620L: Overall screw shaft length (in mm)
- C5: Accuracy symbol
- H1K: Recommended Shaft Ends Shapes (*)

(*) see B15-218.

Note) The ball nut flange faces the fixed side unless otherwise specified.
If desiring the flange to face the supported side, add symbol G in the end of the Ball Screw model number when placing an order.
(Example) BNFN2505-5RRG0+420LC5-J2KG

[2 Standard-Stock Precision Ball Screw Unfinished Shaft Ends]

● **Models BIF, BNFN, MDK, MBF and BNF**

BNFN2005-5RRG0+620LC5A

A: Standard Ball Screw assembly
(A、B:Unfinished Shaft Ends)

Refer to B15-29 for the corresponding model number.

[3 Standard-Stock Precision Ball Screw Finished Shaft Ends]

● **Model BNK**

BNK2020-5+620LC5Y

Y: Standard Ball Screw assembly
(Y :Finished Shaft Ends)

Refer to B15-29 for the corresponding model number.

[4. Rotary Ball Screw]

● **Models BLR and DIR**

BLR2020-3.6 K UU G1 +1000L C5

- BLR2020-3.6: Model No.
- K: Flange orientation symbol
- UU: Symbol for support bearing seal
- G1: Symbol for clearance in the axial direction
- +1000L: Overall screw shaft length (in mm)
- C5: Accuracy symbol

[5. Ball Screw/Spline]

● **Models BNS-A, BNS, NS-A and NS**

BNS2525 +600L

- BNS2525: Model No.
- +600L: Overall shaft length (in mm)

[6 Standard-Stock Rolled Ball Screw Unfinished Shaft Ends]

● **Model MTF**

MTF 08 02 +250L C7 T - H1

- MTF: Model No.
- 08: Screw shaft outer diameter (in mm)
- 02: Lead (in mm)
- +250L: Overall shaft length (in mm)
- C7: Accuracy symbol (No symbol for Normal Grade)
- T: Symbol for ball screw shaft
- H1: Recommended Shaft Ends Shapes (See B15-218 onward)

[7 Rolled Ball Screw]

● **Models JPF, BTK, MTF, BLK ,WTF, CNF and BNT(Rolled)**

● **Combination of the Ball Screw Nut and the Screw Shaft**

BTK1405-2.6 ZZ +500L C7 T - H1K

- BTK1405-2.6: Model No.
- ZZ: Seal symbol
  - no symbol: without seal
  - ZZ: brush seal attached to both ends of the ball screw nut (see A15-166)
- +500L: Overall screw shaft length (in mm)
- C7: Accuracy symbol (see A15-18) (no symbol for class C10)
- T: Symbol for rolled shaft
- H1K: Recommended Shaft Ends Shapes (See B15-218 onward)

[8 Rolled Rotary Ball Screw]

● **Model BLR (Rolled)**

BLR2020-3.6 K UU +1000L C7 T

- BLR2020-3.6: Model No.
- K: Flange orientation symbol
- UU: Symbol for support bearing seal
- +1000L: Overall screw shaft length (in mm)
- C7: Accuracy symbol
- T: Symbol for rolled Ball Screw

Note) For clearance in the axial direction, see A15-25.

[9 Standalone rolled shafts/nuts]

● **Models BTK, BLK/WTF, CNF, BNT(Rolled), BLR(Rolled) and TS**

Rolled shaft only

TS 14 05 +500L C7

- TS: Symbol for rolled ball screw shaft
- 14: Screw shaft outer diameter (in mm)
- 05: Lead (in mm)
- +500L: Overall screw shaft length (in mm)
- C7: Accuracy symbol (see page A15-18) (no symbol for class C10)

Nut only

BTK1405-2.6 ZZ

- BTK1405-2.6: Model No.
- ZZ: Seal symbol
  - no symbol: without seal
  - ZZ: brush seal attached to both ends of the ball screw nut (see A15-166)

[10 Support units, nut brackets and lock nuts]

● **Models EK, BK, FK, EF, BF, FF, MC and RN**

EK12

Model No.

[11 Ball screw options, W wiper rings and QZ lubricators]

BNFN2505-2.5 QZ WW G0 +1000L C5

- QZ: With QZ Lubricator
- WW: With wiper ring W

(*) See B15-227.

Notes on Ordering

[Options]
The details of the product options differ according to the model number. Check before ordering.
See B15-227.

[Other notes on specifications]
Contact THK separately for information on the specifications below.
- Shaft end shape (for recommended shaft end shapes, indicate the symbol).
- Surface Treatment (see A0-20)
- Grease used
- Nipple mounting

[Handling]

(1) Do not disassemble the parts. This will cause dust to enter the product resulting in loss of functionality.
(2) Tilting the screw shaft and the ball screw nut may cause them to fall by their own weight.
(3) Take care not to drop or strike the ball screw. This could cause injury or product damage. Giving an impact to it could also cause damage to its function even if the product looks intact.
(4) Do not remove the ball screw nut from the ball screw shaft. Doing so may cause the balls or the nut to fall off.
(5) Prevent foreign material, such as dust or cutting chips, from entering the system. This could cause damage to ball circulation components and loss of functionality.
(6) Some types of coolant may impair product functionality. When planning to use the product in an environment where the coolant penetrates the Ball Screw Nut, it may cause trouble to product functions depending on the type of the coolant. Contact THK for details.
(7) Do not use the product at temperature of 80 ℃ or higher. Contact THK if you desire to use the product at a temperature of 80℃ or higher.
(8) If the foreign materials such as dust or cutting chips adheres to the product, replenish the lubricant after cleaning the product with pure white kerosene. For available types of detergent, contact THK.
(9) When using this product with a vertical orientation, take preventive measures such as adding a safety mechanism to prevent falls. The dead weight of the ball screw nut may cause it to fall.
(10) Do not use this product beyond its permissible rotational speed. Doing so may cause accidents or component damage. Be sure to use the product within the specification range designated by THK.
(11) Do not use undue force when fitting parts to the ball screw shaft and ball screw nut. Take particular care when installing parts as this may result in indentations in the raceway.
(12) If an offset or skewing occurs with the ball screw shaft support and the ball screw nut, it may substantially shorten the service life. Pay much attention to components to be mounted and to the mounting accuracy.
(13) In locations exposed to constant vibrations or in special environments such as clean rooms, vacuum and low/high temperatures, it may not be possible to use standard products. Contact THK for details.
(14) Do not cause the ball screw nut to overrun. This will lead to problems such as ball displacement or damage to ball circulation components.

[Lubrication]

(1) Thoroughly remove anti-rust oil and feed lubricant before using the product.
(2) Do not mix lubricants of different physical properties.
(3) In locations exposed to constant vibrations or in special environments such as clean rooms, a vacuum and a low/high temperature, normal lubricants may not be used. Contact THK for details.
(4) The use of special lubricants can lead to product damage. Contact THK before using such products.
(5) The lubrication interval varies according to the conditions. Contact THK for details.

[Storage]

When storing the Ball Screw, enclose it in a package designated by THK and store it in a horizontal orientation while avoiding a high temperature, a low temperature and a high humidity.

Ball Screw

THK General Catalog

Ball Screw

THK General Catalog

B Product Specifications

Dimensional Drawing, Dimensional Table
Precision, Caged Ball Screw
Models SBN, SBK and HBN B15-5
DIN Standard compliant Ball Screw (DIN69051)
Models EBA, EBB, EBC, EPA, EPB and EPC .. B15-15
Standard-Stock Precision Ball Screw Unfinished Shaft Ends
Models BIF, BNFN, MDK, MBF and BNF.. B15-29
Standard-Stock Precision Ball Screw
Finished Shaft Ends Model BNK B15-53
Precision Ball Screw
Models BIF, DIK, BNFN, DKN, BLW, BNF, DK, MDK, BLK/WGF and BNT... B15-97
Precision Rotary Ball Screw
Models DIR and BLR B15-165
Precision Ball Screw / Spline
Models BNS-A, BNS, NS-A and NS ... B15-171
Rolled Ball Screw
Models JPF, BTK, MTF, BLK/WTF, CNF and BNT..... B15-181
Unfinished Shaft Ends Rolled Ball Screw
Model MTF B15-193
Rolled Rotary Ball Screw Model BLR ... B15-197

Maximum Length of the Ball Screw Shaft ... B15-200

Ball Screw Peripherals..... B15-203
Model EK Square Type Support Unit on the Fixed Side .. B15-204
Model BK Square Type Support Unit on the Fixed Side .. B15-206
Model FK Round Type Support Unit on the Fixed Side.. B15-208
Model EF Square Type Support Unit on the Supported Side .. B15-212
Model BF Square Type Support Unit on the Supported Side .. B15-214
Model FF Round Type Support Unit on the Supported Side .. B15-216
Recommended Shapes of Shaft Ends - Shape H (H1, H2 and H3) (Support Unit Models FK and EK) B15-218
Recommended Shapes of Shaft Ends - Shape J (J1, J2 and J3) (Support Unit Model BK) B15-220
Recommended Shapes of Shaft Ends - Shape K (Support Unit Models FF, EF and BF)..... B15-222
Nut bracket..... B15-224
Lock Nut B15-226

Options..... B15-227
Dimensions of the Ball Screw Nut Attached with Wiper Ring W and QZ Lubricator..... B15-228

A Technical Descriptions of the Products (Separate)

Features and Types..... A15-4
Features of the Ball Screw..... A15-4
• Driving Torque One Third of the Sliding Screw A15-4
• Ensuring High Accuracy..... A15-7
• Capable of Micro Feeding A15-8
• High Rigidity without Backlash A15-9
• Capable of Fast Feed A15-10
Types of Ball Screws..... A15-12

Point of Selection A15-14
Flowchart for Selecting a Ball Screw.... A15-14
Accuracy of the Ball Screw A15-17
• Lead Angle Accuracy A15-17
• Accuracy of the Mounting Surface A15-20
• Axial Clearance A15-25
• Preload A15-26
Selecting a Screw Shaft A15-30
• Maximum Length of the Screw Shaft A15-30
• Standard Combinations of Shaft Diameter and Lead for the Precision Ball Screw A15-32
• Standard Combinations of Shaft Diameter and Lead for the Rolled Ball Screw .. A15-33
• Permissible Axial Load A15-34
• Permissible Rotational Speed A15-36
Selecting a Nut..... A15-39
• Types of Nuts..... A15-39
Selecting a Model Number..... A15-42
• Calculating the Axial Load..... A15-42
• Static Safety Factor..... A15-43
• Studying the Service Life A15-44
Studying the Rigidity..... A15-47
• Axial Rigidity of the Feed Screw System A15-47
Studying the Positioning Accuracy A15-51
• Causes of Error in Positioning Accuracy..... A15-51
• Studying the Lead Angle Accuracy A15-51
• Studying the Axial Clearance..... A15-51
• Studying the Axial Clearance of the Feed Screw System... A15-53
• Studying the Thermal Displacement through Heat Generation .. A15-55
• Studying the Orientation Change during Traveling.. A15-56
Studying the Rotational Torque A15-57
• Friction Torque Due to an External Load A15-57
• Torque Due to a Preload on the Ball Screw .. A15-58
• Torque Required for Acceleration..... A15-59
• Investigating the Terminal Strength of Ball Screw Shafts.. A15-60
Studying the Driving Motor A15-62
• When Using a Servomotor A15-62
• When Using a Stepping Motor (Pulse Motor)..... A15-64
Examples of Selecting a Ball Screw A15-65
• High-speed Transfer Equipment (Horizontal Use).. A15-65
• Vertical Conveyance System A15-79

Feature of Each Model A15-91
Precision, Caged Ball Screw Models SBN, SBK and HBN... A15-92
• Structure and Features A15-93
• Ball Cage Effect..... A15-93
• Types and Features A15-96
• Service Life..... A15-44

• Axial Clearance A15-25
• Accuracy Standards A15-18
• Example of Assembling Model HBN A15-97

DIN Standard compliant Ball Screw (DIN69051)
Models EBA, EBB, EBC, EPA, EPB and EPC .. A15-98
• Structure and Features A15-99
• Types and Features A15-100
• Service Life A15-44
• Axial Clearance A15-25
• Accuracy Standards A15-101

Standard-Stock Precision Ball Screw Unfinished Shaft Ends
Models BIF, BNFN, MDK, MBF and BNF . A15-102
• Structure and Features A15-103
• Types and Features A15-104
• Service Life A15-44
• Nut Types and Axial Clearance A15-106

Standard-Stock Precision Ball Screw Finished Shaft Ends Model BNK A15-108
• Features A15-109
• Types and Features A15-109
• Table of Ball Screw Types with Finished Shaft Ends and the Corresponding Support Units and Nut Brackets .. A15-110

Precision Ball Screw Models BIF, DIK, BNFN, DKN, BLW, BNF, DK, MDK, BLK/WGF and BNT .. A15-112
• Structure and Features A15-113
• Types and Features A15-117
• Service Life A15-44
• Axial Clearance A15-25
• Accuracy Standards A15-18

Precision Rotary Ball Screw Models DIR and BLR .. A15-120
• Structure and Features A15-121
• Type A15-123
• Service Life A15-44
• Axial Clearance A15-25
• Accuracy Standards A15-124
• Example of Assembly A15-126

Precision Ball Screw / Spline Models BNS-A, BNS, NS-A and NS A15-128
• Structure and Features A15-129
• Type A15-130
• Service Life A15-44
• Axial Clearance A15-25
• Accuracy Standards A15-131
• Action Patterns A15-132
• Example of Assembly A15-135
• Example of Using the Spring Pad A15-136
• Precautions on Use A15-137

Rolled Ball Screw
Models JPF, BTK, MTF, BLK/WTF, CNF and BNT A15-138
• Structure and Features A15-139
• Types and Features A15-140
• Service Life A15-44
• Axial Clearance A15-25
• Accuracy Standards A15-18

Standard unfinished shaft ends
Rolled ball screw Model MTF A15-144
• Structure and Features A15-145
• Types and Features A15-145

Rolled Rotary Ball Screw Model BLR ... A15-146
• Structure and Features A15-147
• Type A15-147
• Service Life A15-44
• Axial Clearance A15-25
• Accuracy Standards A15-148
• Example of Assembly A15-149

Ball Screw Peripherals A15-151
Support Unit Models EK, BK, FK, EF, BF and FF A15-152
• Structure and Features A15-152
• Type A15-154
• Types of Support Units and Applicable Screw Shaft Outer Diameters A15-155
• Model Numbers of Bearings and Characteristic Values A15-156
• Example of Installation A15-157
• Mounting Procedure A15-158
• Types of Recommended Shapes of the Shaft Ends. A15-160
Nut Bracket Model MC A15-162
• Structure and Features A15-162
• Type A15-162
Lock Nut Model RN A15-163
• Structure and Features A15-163
• Type A15-163

Options A15-165
Lubrication A15-166
Corrosion Prevention (Surface Treatment, etc.) A15-166
Contamination Protection A15-166
• QZ Lubricator A15-167
• Wiper Ring W A15-169
• Specifications of the Bellows A15-172

Mounting Procedure and Maintenance A15-174
Method for Mounting the Ball Screw Shaft . A15-174
Maintenance Method A15-176
• Amount of Lubricant A15-176

Model No. A15-177
• Model Number Coding A15-177
• Notes on Ordering A15-181

Precautions on Use A15-182

*** Please see the separate "A Technical Descriptions of the Products".**

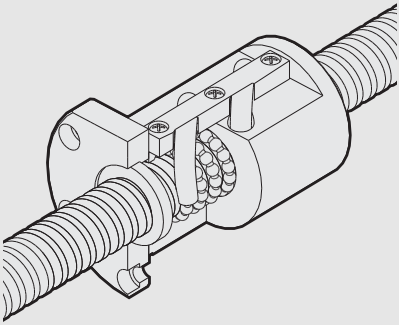

Precision, Caged Ball Screw
Models SBN, SBK and HBN

Ball Screw

B Product Specifications

Dimensional Drawing, Dimensional Table

Model SBN B15-6
Model SBK B15-10
Model HBN B15-12

Options

Dimensions of the Ball Screw Nut Attached with Wiper Ring W and QZ Lubricator B15-228

A Technical Descriptions of the Products (Separate)

Technical Descriptions

Structure and Features A15-93
Ball Cage Effect A15-93
Types and Features A15-96
Service Life A15-44
Axial Clearance A15-25
Accuracy Standards A15-18
Example of Assembling Model HBN ... A15-97

* Please see the separate "A Technical Descriptions of the Products".

Model SBN

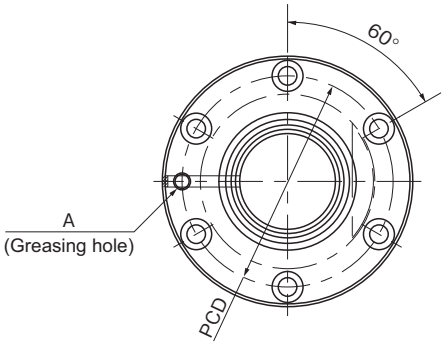

Model No.	Screw shaft outer diameter d	Lead Ph	Ball center-to-center diameter dp	Thread minor diameter dc	No. of loaded circuits Rows x turns	Basic load rating Ca kN	Basic load rating C_0a kN	Rigidity K N/μm
SBN 1604-5	16	4	16.5	13.8	1×2.5	5.3	8	281
SBN 1605-5	16	5	16.75	13.2	1×2.5	9.2	12.9	309
SBN 2004-5	20	4	20.5	17.8	1×2.5	5.9	10.1	335
SBN 2005-5	20	5	20.75	17.2	1×2.5	10.3	16.2	370
SBN 2504-5	25	4	25.5	22.8	1×2.5	6.4	12.7	400
SBN 2505-5	25	5	25.75	22.2	1×2.5	11.3	20.3	442
SBN 2506-5	25	6	26	21.4	1×2.5	15.4	25.4	457
SBN 2805-5	28	5	28.75	25.2	1×2.5	11.8	22.8	483
SBN 2806-5	28	6	29	24.4	1×2.5	16.2	28.5	499
SBN 3205-5	32	5	32.75	29.2	1×2.5	12.6	26.1	536
SBN 3206-5	32	6	33	28.4	1×2.5	17.2	32.7	555

Note) With model SBN, the raising of both ends of the thread groove is not available. When designing your system this way, contact THK.

Model number coding

SBN1604-5 QZ RR G0 +1200L C5

- SBN1604-5: Model No.
- QZ: With QZ Lubricator (no symbol if the model is without a QZ Lubricator)
- RR: Seal symbol (*1)
- G0: Clearance in the axial direction (G0 for all SBN variations) (*2)
- +1200L: Overall screw shaft length (in mm)
- C5: Accuracy symbol (*3)

(*1) See A15-166. (*2) See A15-25. (*3) See A15-18.

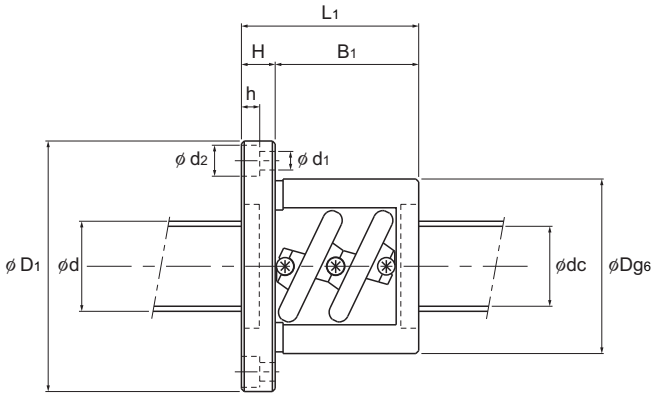

Unit: mm

	Nut dimensions								Screw shaft inertial moment/mm	Nut mass	Shaft mass
	Outer diameter Dg_6	Flange diameter D_1	Overall length L_1	H	B_1	PCD	$d_1 \times d_2 \times h$	Greasing hole A	kg・cm²/mm	kg	kg/m
	36	59	53	11	42	47	5.5×9.5×5.5	M6×1	5.05E-04	0.42	1.35
	40	60	56	10	46	50	4.5×8×4.5	M6×1	5.05E-04	0.50	1.25
	40	63	53	11	42	51	5.5×9.5×5.5	M6×1	1.23E-03	0.48	2.18
	44	67	56	11	45	55	5.5×9.5×5.5	M6×1	1.23E-03	0.61	2.06
	46	69	48	11	37	57	5.5×9.5×5.5	M6×1	3.01E-03	0.55	3.50
	50	73	55	11	44	61	5.5×9.5×5.5	M6×1	3.01E-03	0.72	3.35
	53	76	62	11	51	64	5.5×9.5×5.5	M6×1	3.01E-03	0.90	3.19
	55	85	59	12	47	69	6.6×11×6.5	M6×1	4.74E-03	0.98	4.27
	59	89	63	12	51	73	6.6×11×6.5	M6×1	4.74E-03	1.19	4.33
	58	85	56	12	44	71	6.6×11×6.5	M6×1	8.08E-03	0.96	5.67
	62	89	63	12	51	75	6.6×11×6.5	M6×1	8.08E-03	1.22	6.31

Note) The rigidity values in the table represent spring constants each obtained from the load and the elastic deformation when providing a preload 10% of the basic dynamic load rating (Ca) and applying an axial load three times greater than the preload.
These values do not include the rigidity of the components related to mounting the ball screw nut. Therefore, it is normally appropriate to regard roughly 80% of the value in the table as the actual value.
If the applied preload (Fa_0) is not 0.1 Ca, the rigidity value (K_N) is obtained from the following equation.

$$K_N = K\left(\frac{Fa_0}{0.1Ca}\right)^{\frac{1}{3}}$$

K: Rigidity value in the dimensional table.

Model SBN

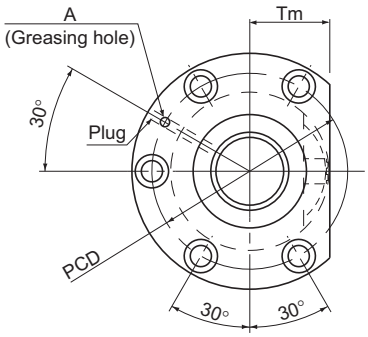

Model No.	Screw shaft outer diameter	Lead	Ball center-to-center diameter	Thread minor diameter	No. of loaded circuits	Basic load rating		Rigidity
						Ca	C₀a	K
	d	Ph	dp	dc	Rows x turns	kN	kN	N/μm
○ SBN 3210-7	32	10	33.75	26.4	1×3.5	43	73.1	836.7
○ SBN 3212-5	32	12	34	26.1	1×2.5	37.4	58.7	612.2
○ SBN 3610-7	36	10	37.75	30.4	1×3.5	45.6	82.3	920.9
○ SBN 3612-7	36	12	38	30.1	1×3.5	53.2	92.6	934.5
○ SBN 3616-5	36	16	38	30.1	1×2.5	39.7	66.4	676
○ SBN 4012-5	40	12	42	34.1	1×2.5	42	73.6	735.4
○ SBN 4016-5	40	16	42	34.1	1×2.5	41.9	73.8	736.6
○ SBN 4512-5	45	12	47	39.2	1×2.5	44.4	82.9	809.1
○ SBN 4516-5	45	16	47	39.2	1×2.5	44.3	83.1	810.1
○ SBN 5012-5	50	12	52	44.1	1×2.5	46.6	92.2	880.9
○ SBN 5016-5	50	16	52	44.1	1×2.5	46.6	92.4	881.7
○ SBN 5020-5	50	20	52	44.1	1×2.5	46.5	92.6	882.8

Note) With model SBN, the raising of both ends of the thread groove is not available. When designing your system this way, contact THK.
Those models marked with ○ can be attached with QZ Lubricator or the wiper ring. For dimensions of the ball screw nut with either accessory being attached, see B15-228.

Model number coding

SBN4012-5 RR G0 +1400L C5

- SBN4012-5: Model number
- RR: Seal symbol (*1)
- G0: Clearance in the axial direction (G0 for all SBN variations) (*2)
- +1400L: Overall screw shaft length (in mm)
- C5: Accuracy symbol (*3)

(*1) See A15-166. (*2) See A15-25. (*3) See A15-18.

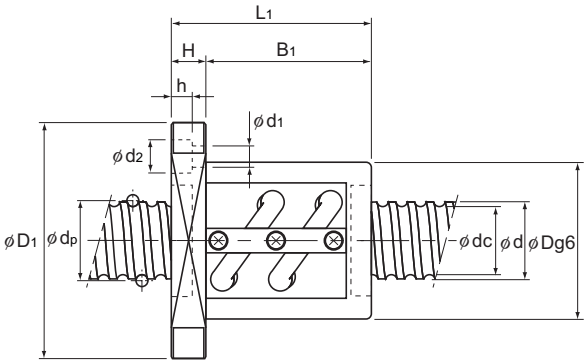

Unit: mm

	Nut dimensions									Screw shaft inertial moment/mm	Nut mass	Shaft mass
	Outer diameter D	Flange diameter D_1	Overall length L_1	H	B_1	PCD	$d_1 \times d_2 \times h$	Tm	Greasing hole A	kg・cm²/mm	kg	kg/m
	74	108	120	15	105	90	9×14×8.5	38	M6	8.08×10^{-3}	3.1	3.6
	76	121	117	18	99	98	11×17.5×11	39	M6	8.08×10^{-3}	3.7	3.5
	77	120	123	18	105	98	11×17.5×11	40	M6	1.29×10^{-2}	3.8	5.0
	81	124	140	18	122	102	11×17.5×11	42	M6	1.29×10^{-2}	4.7	4.8
	81	124	140	18	122	102	11×17.5×11	42	M6	1.29×10^{-2}	4.7	5.6
	84	126	119	18	101	104	11×17.5×11	43	M6	1.97×10^{-2}	4.2	6.4
	84	126	144	18	126	104	11×17.5×11	43	M6	1.97×10^{-2}	4.9	7.3
	90	130	119	18	101	110	11×17.5×11	46	PT 1/8	3.16×10^{-2}	4.6	8.6
	90	130	140	18	122	110	11×17.5×11	46	PT 1/8	3.16×10^{-2}	5.3	9.6
	95	141	119	22	97	117	14×20×13	48	PT 1/8	4.82×10^{-2}	5.3	11.1
	95	141	143	22	121	117	14×20×13	48	PT 1/8	4.82×10^{-2}	6.1	12.2
	95	141	169	22	147	117	14×20×13	48	PT 1/8	4.82×10^{-2}	7.0	12.8

Note) The rigidity values in the table represent the spring constants obtained from the load and the elastic deformation when providing a preload 10% of the basic dynamic load rating (Ca) and applying an axial load three times greater than the preload.
These values do not include the rigidity of the components related to mounting the ball screw nut. Therefore, it is normally appropriate to regard roughly 80% of the value in the table as the actual value.
If the applied preload (Fa_0) is not 0.1 Ca, the rigidity value (K_N) is obtained from the following equation.

$$K_N = K\left(\frac{Fa_0}{0.1Ca}\right)^{\frac{1}{3}}$$

K: Rigidity value in the dimensional table.

Model SBK

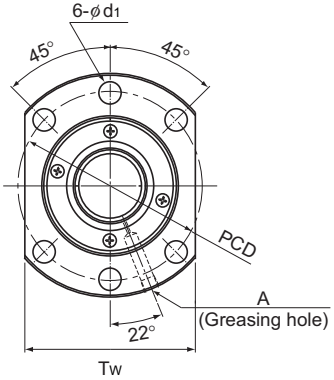

Model No.	Screw shaft outer diameter	Lead	Ball center-to-center diameter	Thread minor diameter	No. of loaded circuits	Basic load rating		Rigidity
						Ca	C0a	K
	d	Ph	dp	dc	Rows x turns	kN	kN	N/μm
SBK 3620-7.6	36	20	37.75	30.4	1×3.8	48.5	85	870
SBK 3636-5.6	36	36	37.75	31.4	1×2.8	36.6	64.7	460
SBK 4020-7.6	40	20	42	34.1	1×3.8	59.7	112.7	970
SBK 4030-7.6	40	30	42	34.1	1×3.8	59.2	107.5	970
SBK 4040-5.6	40	40	42	34.9	1×2.8	44.8	80.3	520
SBK 5020-7.6	50	20	52	44.1	1×3.8	66.8	141.9	1170
SBK 5030-7.6	50	30	52	44.1	1×3.8	66.5	135	1170
SBK 5036-7.6	50	36	52	44.1	1×3.8	65.9	135	1170
SBK 5050-5.6	50	50	52	44.9	1×2.8	50.3	102.4	630
SBK 5520-7.6	55	20	57	49.1	1×3.8	69.8	156.4	1250
SBK 5530-7.6	55	30	57	49.1	1×3.8	69.2	147	1250
SBK 5536-7.6	55	36	57	49.1	1×3.8	69.1	148.7	1260

Note) With model SBK, the raising of both ends of the thread groove is not available. When designing your system this way, contact THK.
Those models marked with ○ can be attached with QZ Lubricator or the wiper ring. For dimensions of the ball screw nut with either accessory being attached, see B15-228.

Model number coding

SBK3620-7.6 RR G0 +1500L C5

Model number — Seal symbol (*1) — Symbol for clearance in the axial direction (*2) — Overall screw shaft length (in mm) — Accuracy symbol (*3)

(*1) See A15-166. (*2) See A15-25. (*3) See A15-18.

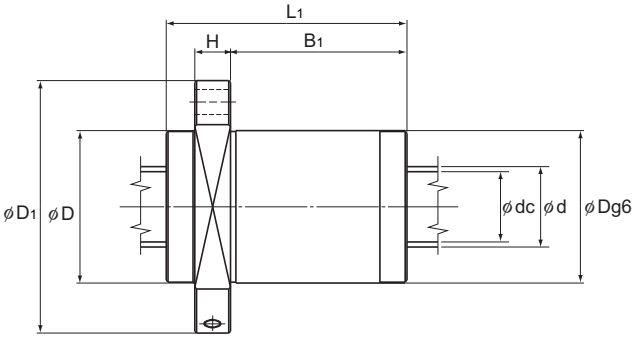

Unit: mm

	Nut dimensions									Screw shaft inertial moment/mm	Nut mass	Shaft mass
	Outer diameter D	Flange diameter D_1	Overall length L_1	H	B_1	PCD	d_1	T_W	Greasing hole A	kg・cm²/mm	kg	kg/m
	73	114	110	18	81	93	11	86	PT 1/8	1.29×10^{-2}	3.4	5.0
	73	114	134	18	105	93	11	86	PT 1/8	1.29×10^{-2}	3.37	7.43
	80	136	110	20	79	112	14	103	PT 1/8	1.97×10^{-2}	4.5	5.7
	80	136	148	20	117	112	14	103	PT 1/8	1.97×10^{-2}	5.6	7.0
	80	136	146	20	115	112	14	103	PT 1/8	1.97×10^{-2}	4.74	9.16
	90	146	110	22	77	122	14	110	PT 1/8	4.82×10^{-2}	5.3	10.2
	90	146	149	22	116	122	14	110	PT 1/8	4.82×10^{-2}	6.6	11.9
	90	146	172	22	139	122	14	110	PT 1/8	4.82×10^{-2}	7.4	12.5
	90	146	175	22	142	122	14	110	PT 1/8	4.82×10^{-2}	6.46	14.72
	96	152	110	22	77	128	14	114	PT 1/8	7.05×10^{-2}	5.7	13.0
	96	152	149	22	116	128	14	114	PT 1/8	7.05×10^{-2}	7.2	14.8
	96	152	172	22	139	128	14	114	PT 1/8	7.05×10^{-2}	8.1	15.5

Note) The rigidity values in the table represent the spring constants obtained from the load and the elastic deformation when providing a preload 10% of the basic dynamic load rating (Ca) and applying an axial load three times greater than the preload.
These values do not include the rigidity of the components related to mounting the ball screw nut. Therefore, it is normally appropriate to regard roughly 80% of the value in the table as the actual value.
If the applied preload (Fa_0) is not 0.1 Ca, the rigidity value (K_N) is obtained from the following equation.

$$K_N = K\left(\frac{Fa_0}{0.1Ca}\right)^{\frac{1}{3}}$$

K: Rigidity value in the dimensional table.

Model HBN

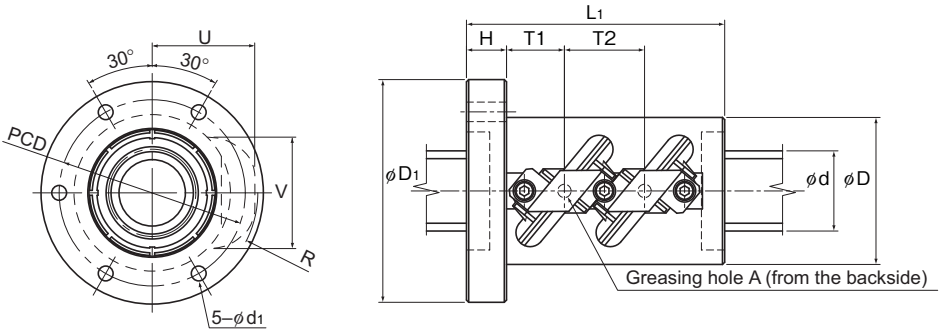

Models HBN3210 to 3612

Model No.	Screw shaft outer diameter	Lead	Ball center-to-center diameter	Thread minor diameter	No. of loaded circuits	Basic load rating		Permissible load*	Rigidity
						Ca	C_0a	F_P	K
	d	Ph	dp	dc	Rows x turns	kN	kN	kN	N/μm
HBN 3210-5	32	10	34	26	2×2.5	102.9	191.3	31.9	1077
HBN 3610-5	36	10	38	30	2×2.5	108.2	220.4	33.5	1176
HBN 3612-5	36	12	38.4	29	2×2.5	141.1	267.7	43.7	1207
HBN 4010-7.5	40	10	42	34	3×2.5	162.6	336	50.4	1910
HBN 4012-7.5	40	12	42.4	33	3×2.5	212.4	441.6	65.8	1922
HBN 5010-7.5	50	10	52	44	3×2.5	179.1	462.7	55.5	2279
HBN 5012-7.5	50	12	52.4	43	3×2.5	235.7	572.2	73.1	2345
HBN 5016-7.5	50	16	53	39.6	3×2.5	379.6	820.9	117.7	2392
HBN 6316-7.5	63	16	66	52.6	3×2.5	427.1	1043.8	132.4	2898
HBN 6316-10.5	63	16	66	52.6	3×3.5	577.1	1461.3	178.9	4029
HBN 6320-7.5	63	20	66.5	49.6	3×2.5	578.8	1283.1	179.4	3030

Note) The permissible load F_P* indicates the maxim axial load that the Ball Screw can receive.
This model is capable of achieving a longer service life than the conventional Ball Screw under a high load.
For the axial clearance, this model has clearance G2 as the standard. Other clearance is also available at your request.
Contact THK for details.

Model number coding

HBN3210-5 RR G2 +1200L C7

Model number — Seal symbol (*1) — Symbol for clearance in the axial direction (*2) — Overall screw shaft length (in mm) — Accuracy symbol (*3)

(*1) See A15-166. (*2) See A15-25. (*3) See A15-18.

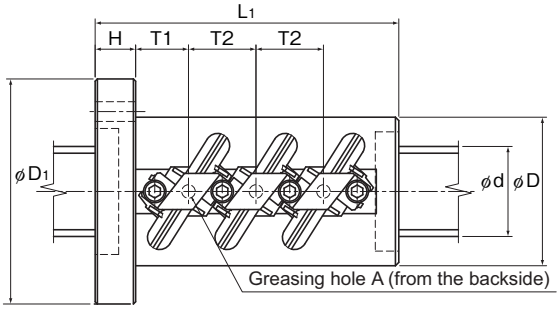

Models HBN4010 to 6320

Unit: mm

	Nut dimensions												Screw shaft inertial moment/mm	Nut mass	Shaft mass
	Outer diameter D	Flange diameter D_1	Overall length L_1	H	PCD	d_1	T1	T2	U_{MAX}	V_{MAX}	R_{MAX}	Greasing hole A	kg・cm²/mm	kg	kg/m
	58	85	98	15	71	6.6	22	30	43	46	43.5	M6	8.08×10^{-3}	1.8	5.26
	62	89	98	15	75	6.6	22	30	45	50	46	M6	1.29×10^{-2}	1.9	6.79
	66	100	116	18	82	9	26	36	49	52.5	50	M6	1.29×10^{-2}	2.8	6.55
	66	100	135	18	82	9	23.5	30	46.5	54	48	M6	1.97×10^{-2}	2.9	8.52
	70	104	152	18	86	9	26	36	51	56	52	M6	1.97×10^{-2}	3.7	5.24
	78	112	135	18	94	9	23.5	30	52	63.5	54.5	M6	4.82×10^{-2}	3.7	13.7
	80	114	152	18	96	9	26	36	56	66	58.5	M6	4.82×10^{-2}	4.4	13.34
	95	135	211	28	113	9	37.5	48	64.5	69.6	65.2	PT 1/8	4.82×10^{-2}	10.0	12.1
	105	139	211	28	122	9	37.5	48	70.5	82	72.5	PT 1/8	1.21×10^{-1}	10.6	20.2
	105	139	259	28	122	9	53.5	64	70.5	82	73	PT 1/8	1.21×10^{-1}	17.4	20.2
	117	157	252	32	137	11	44	60	79	86.5	80	PT 1/8	1.21×10^{-1}	17.2	19.13

Note) The rigidity values in the table represent the spring constants obtained from the load and the elastic deformation when providing an axial load, 30% of the basic dynamic load rating (Ca).
These values do not include the rigidity of the components related to mounting the ball screw nut. Therefore, it is normally appropriate to regard roughly 80% of the value in the table as the actual value.
If the axial load (Fa) is not 0.3 Ca, the rigidity value (K_N) is obtained from the following equation.

$$K_N = K\left(\frac{Fa}{0.3Ca}\right)^{\frac{1}{3}}$$

K: Rigidity value in the dimensional table.

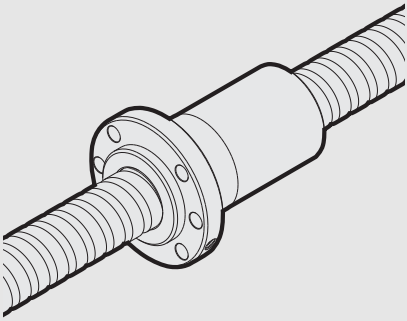

DIN Standard compliant Ball Screw (DIN69051)
Models EBA, EBB, EBC, EPA, EPB and EPC

Ball Screw

B Product Specifications

Dimensional Drawing, Dimensional Table

Model EBA B15-16
Model EBB B15-18
Model EBC B15-20
Model EPA B15-22
Model EPB B15-24
Model EPC B15-26

Options

Dimensions of the Ball Screw Nut Attached with Wiper Ring W and QZ Lubricator B15-228

A Technical Descriptions of the Products (Separate)

Technical Descriptions

Structure and Features A15-99
Types and Features A15-100
Service Life A15-44
Axial Clearance A15-25
Accuracy Standards A15-101

* Please see the separate "A Technical Descriptions of the Products".

Model EBA (Dimensional Table of Model EBA Over-ball preloaded type or non-preloaded type)

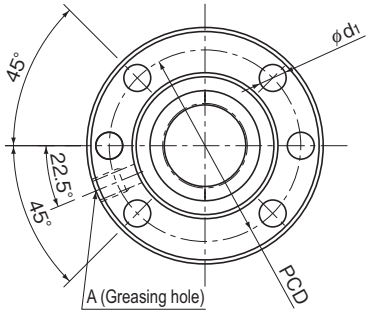

Hole type 1
(Model EBA1605 to 3210)

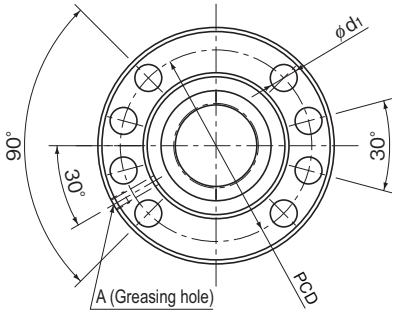

Hole type 2
(Model EBA4005 to 6320)

Model No.	Screw shaft outer diameter d	Lead ℓ	Ball diameter Da	Ball center-to-center diameter dp	Thread minor diameter d_3	No. of loaded circuits Rows x turns	Basic load rating Ca★ kN	Basic load rating C_0a kN	Rigidity K N/μm
EBA 1605-4	16	5	3.175	16.75	13.1	4×1	11.9	17.4	210
EBA 2005-3	20	5	3.175	20.75	17.1	3×1	10.6	17.3	200
EBA 2505-3	25	5	3.175	25.75	22.1	3×1	12.1	22.6	250
EBA 2510-3	25	10	3.969	26	21.6	3×1	15.9	27	250
EBA 2510-4	25	10	3.969	26	21.6	4×1	20.9	37.6	330
EBA 3205-3	32	5	3.175	32.75	29.2	3×1	13.9	30.2	300
EBA 3205-4	32	5	3.175	32.75	29.2	4×1	17.8	40.3	400
EBA 3205-6	32	5	3.175	32.75	29.2	6×1	25.1	60.4	600
EBA 3210-3	32	10	6.35	33.75	26.4	3×1	32.1	52.2	300
EBA 3210-4	32	10	6.35	33.75	26.4	4×1	41.3	69.7	390
EBA 4005-6	40	5	3.175	40.75	37.1	6×1	26.6	77.5	716
EBA 4010-3	40	10	6.35	41.75	34.4	3×1	37.3	69.3	380
EBA 4010-4	40	10	6.35	41.75	34.4	4×1	47.6	92.4	500
EBA 4020-3	40	20	6.35	41.75	34.7	3×1	36.8	69.3	750
EBA 5010-4	50	10	6.35	51.75	44.4	4×1	54.3	120.5	610
EBA 5020-3	50	20	7.938	52.25	43.6	3×1	55.3	108.8	470
EBA 6310-6	63	10	6.35	64.75	57.7	6×1	87.9	242.1	1140
EBA 6320-3	63	20	9.525	65.7	56.0	3×1	104.4	229.3	1470

Note) ★ Basic Dynamic Load Rating(Ca) of the accuracy C7 and Ct7 is 0.9Ca.

Model number coding

EB A 20 05 -6 QZ RR G0 +650L C3

- EB: Nut type: over-ball preloaded type or non-preloaded type
- A: Flange shape: A: round; B: double chamfered; C: single chamfered
- 20: Shaft diameter
- 05: Lead
- -6: Number of turns
- QZ: With QZ Lubricator (no symbol without QZ Lubricator)
- RR: Seal symbol (RR : Labyrinth seal, WW : Wiper ring.)
- G0: Clearance symbol
- +650L: Ball screw shaft length (mm)
- C3: Accuracy symbol

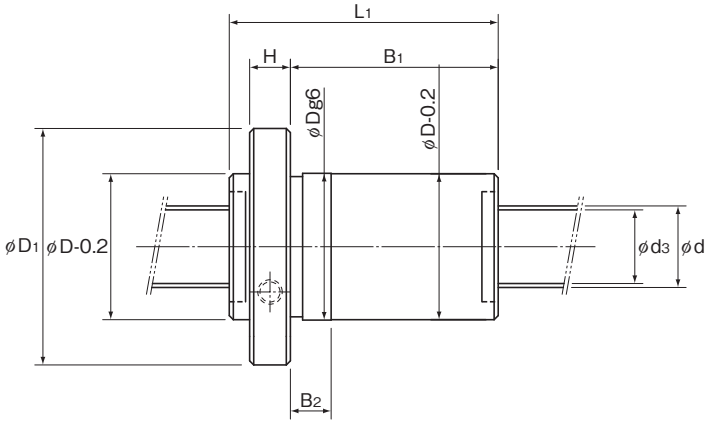

Unit: mm

	Nut dimensions										
	Outer diameter D	Flange diameter D_1	Overall length L_1	H	B_1	B_2	Hole type	PCD	d_1	Tw	Greasing hole A
	28	48	55	10	40	12	1	38	5.5	20	M6×1
	36	58	50	10	35	12	1	47	6.6	22	M6×1
	40	62	50	10	35	12	1	51	6.6	24	M6×1
	40	62	80	10	65	18	1	51	6.6	24	M6×1
	40	62	85	10	70	18	1	51	6.6	24	M6×1
	50	80	52	12	35	12	1	65	9	31	M6×1
	50	80	57	12	40	12	1	65	9	31	M6×1
	50	80	67	12	50	12	1	65	9	31	M6×1
	50	80	82	12	65	18	1	65	9	31	M6×1
	50	80	94	12	77	18	1	65	9	31	M6×1
	63	93	70	14	51	12	2	78	9	35	M8×1
	63	93	84	14	65	18	2	78	9	35	M8×1
	63	93	94	14	75	18	2	78	9	35	M8×1
	63	93	129	14	105	25	2	78	9	35	M8×1
	75	110	96	16	75	18	2	93	11	42.5	M8×1
	75	110	134	16	108	27	2	93	11	42.5	M8×1
	90	125	119	18	96	18	2	108	11	47.5	M8×1
	95	135	136	18	108	27	2	115	13.5	50	M8×1

Note) The rigidity values in the table represent spring constants each obtained from the load and the Elastic Deformation finish when providing an axial load 24% of the basic dynamic load rating (Ca).
These values do not include the rigidity of the components related to mounting the nut. Therefore, it is normally appropriate to regard roughly 80% of the value in the table as the actual value.
If the axial load (Fa) is not 0.24 Ca, the rigidity value (K_N) is obtained from the following equation.

$$K_N = K\left(\frac{Fa}{0.24Ca}\right)^{\frac{1}{3}}$$

K: Rigidity value in the dimensional table.

Model EBB (Dimensional Table of Model EBB Over-ball preloaded type or non-preloaded type)

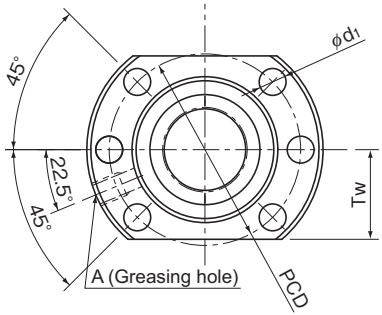

Hole type 1
(Model EBB1605 to 3210)

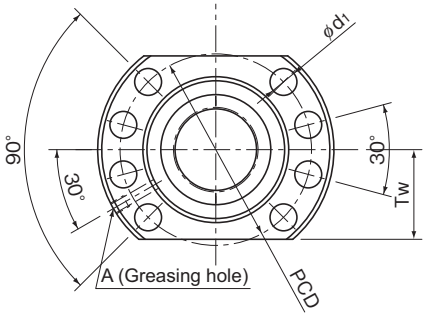

Hole type 2
(Model EBB4005 to 6320)

Model No.	Screw shaft outer diameter d	Lead ℓ	Ball diameter Da	Ball center-to-center diameter dp	Thread minor diameter d_3	No. of loaded circuits Rows x turns	Basic load rating Ca★ kN	Basic load rating C_0a kN	Rigidity K N/μm
EBB 1605-4	16	5	3.175	16.75	13.1	4×1	11.9	17.4	210
EBB 2005-3	20	5	3.175	20.75	17.1	3×1	10.6	17.3	200
EBB 2505-3	25	5	3.175	25.75	22.1	3×1	12.1	22.6	250
EBB 2510-3	25	10	3.969	26	21.6	3×1	15.9	27	250
EBB 2510-4	25	10	3.969	26	21.6	4×1	20.9	37.6	330
EBB 3205-3	32	5	3.175	32.75	29.2	3×1	13.9	30.2	300
EBB 3205-4	32	5	3.175	32.75	29.2	4×1	17.8	40.3	400
EBB 3205-6	32	5	3.175	32.75	29.2	6×1	25.1	60.4	600
EBB 3210-3	32	10	6.35	33.75	26.4	3×1	32.1	52.2	300
EBB 3210-4	32	10	6.35	33.75	26.4	4×1	41.3	69.7	390
EBB 4005-6	40	5	3.175	40.75	37.1	6×1	26.6	77.5	716
EBB 4010-3	40	10	6.35	41.75	34.4	3×1	37.3	69.3	380
EBB 4010-4	40	10	6.35	41.75	34.4	4×1	47.6	92.4	500
EBB 4020-3	40	20	6.35	41.75	34.7	3×1	36.8	69.3	750
EBB 5010-4	50	10	6.35	51.75	44.4	4×1	54.3	120.5	610
EBB 5020-3	50	20	7.938	52.25	43.6	3×1	55.3	108.8	470
EBB 6310-6	63	10	6.35	64.75	57.7	6×1	87.9	242.1	1140
EBB 6320-3	63	20	9.525	65.7	56.0	3×1	104.4	229.3	1470

Note) ★ Basic Dynamic Load Rating(Ca) of the accuracy C7 and Ct7 is 0.9Ca.

Model number coding

EB B 20 05 -6 QZ RR G0 +650L C3

- EB: Nut type: over-ball preloaded type or non-preloaded type
- B: Flange shape: A: round; B: double chamfered; C: single chamfered
- 20: Shaft diameter
- 05: Lead
- -6: Number of turns
- QZ: With QZ Lubricator (no symbol without QZ Lubricator)
- RR: Seal symbol (RR : Labyrinth seal, WW : Wiper ring.)
- G0: Clearance symbol
- +650L: Ball screw shaft length (mm)
- C3: Accuracy symbol

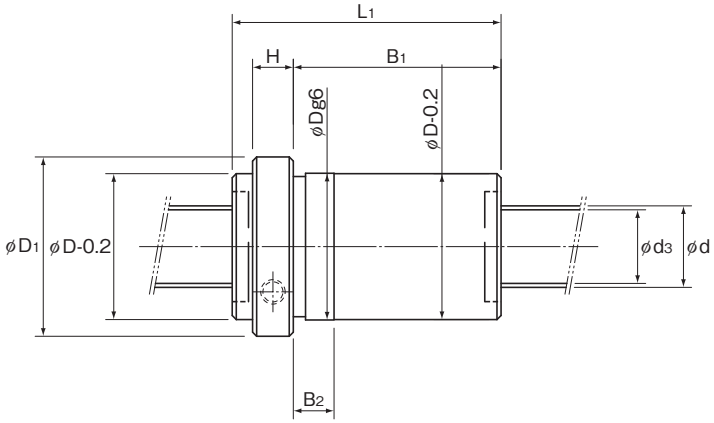

Unit: mm

	Nut dimensions										
	Outer diameter D	Flange diameter D_1	Overall length L_1	H	B_1	B_2	Hole type	PCD	d_1	Tw	Greasing hole A
	28	48	55	10	40	12	1	38	5.5	20	M6×1
	36	58	50	10	35	12	1	47	6.6	22	M6×1
	40	62	50	10	35	12	1	51	6.6	24	M6×1
	40	62	80	10	65	18	1	51	6.6	24	M6×1
	40	62	85	10	70	18	1	51	6.6	24	M6×1
	50	80	52	12	35	12	1	65	9	31	M6×1
	50	80	57	12	40	12	1	65	9	31	M6×1
	50	80	67	12	50	12	1	65	9	31	M6×1
	50	80	82	12	65	18	1	65	9	31	M6×1
	50	80	94	12	77	18	1	65	9	31	M6×1
	63	93	70	14	51	12	2	78	9	35	M8×1
	63	93	84	14	65	18	2	78	9	35	M8×1
	63	93	94	14	75	18	2	78	9	35	M8×1
	63	93	129	14	105	25	2	78	9	35	M8×1
	75	110	96	16	75	18	2	93	11	42.5	M8×1
	75	110	134	16	108	27	2	93	11	42.5	M8×1
	90	125	119	18	96	18	2	108	11	47.5	M8×1
	95	135	136	18	108	27	2	115	13.5	50	M8×1

Note) The rigidity values in the table represent spring constants each obtained from the load and the Elastic Deformation finish when providing an axial load 24% of the basic dynamic load rating (Ca).
These values do not include the rigidity of the components related to mounting the nut. Therefore, it is normally appropriate to regard roughly 80% of the value in the table as the actual value.
If the axial load (Fa) is not 0.24 Ca, the rigidity value (K_N) is obtained from the following equation.

$$K_N = K\left(\frac{Fa}{0.24Ca}\right)^{\frac{1}{3}}$$

K: Rigidity value in the dimensional table.

Model EBC (Dimensional Table of Model EBC Over-ball preloaded type or non-preloaded type)

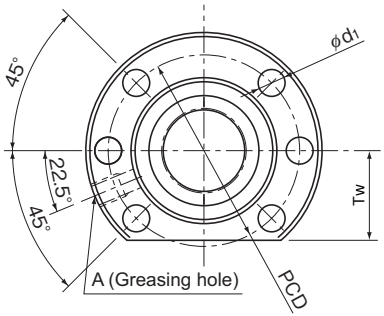

Hole type 1
(Model EBC1605 to 3210)

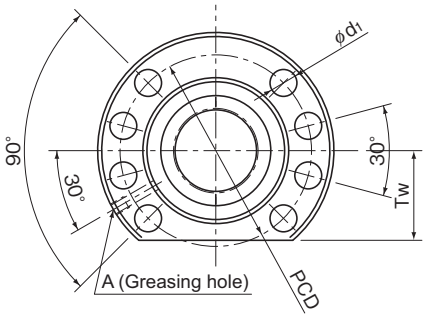

Hole type 2
(Model EBC4005 to 6320)

Model No.	Screw shaft outer diameter	Lead	Ball diameter	Ball center-to-center diameter	Thread minor diameter	No. of loaded circuits	Basic load rating		Rigidity
							Ca★	C₀a	K
	d	ℓ	Da	dp	d_3	Rows x turns	kN	kN	N/μm
EBC 1605-4	16	5	3.175	16.75	13.1	4×1	11.9	17.4	210
EBC 2005-3	20	5	3.175	20.75	17.1	3×1	10.6	17.3	200
EBC 2505-3	25	5	3.175	25.75	22.1	3×1	12.1	22.6	250
EBC 2510-3	25	10	3.969	26	21.6	3×1	15.9	27	250
EBC 2510-4	25	10	3.969	26	21.6	4×1	20.9	37.6	330
EBC 3205-3	32	5	3.175	32.75	29.2	3×1	13.9	30.2	300
EBC 3205-4	32	5	3.175	32.75	29.2	4×1	17.8	40.3	400
EBC 3205-6	32	5	3.175	32.75	29.2	6×1	25.1	60.4	600
EBC 3210-3	32	10	6.35	33.75	26.4	3×1	32.1	52.2	300
EBC 3210-4	32	10	6.35	33.75	26.4	4×1	41.3	69.7	390
EBC 4005-6	40	5	3.175	40.75	37.1	6×1	26.6	77.5	716
EBC 4010-3	40	10	6.35	41.75	34.4	3×1	37.3	69.3	380
EBC 4010-4	40	10	6.35	41.75	34.4	4×1	47.6	92.4	500
EBC 4020-3	40	20	6.35	41.75	34.7	3×1	36.8	69.3	750
EBC 5010-4	50	10	6.35	51.75	44.4	4×1	54.3	120.5	610
EBC 5020-3	50	20	7.938	52.25	43.6	3×1	55.3	108.8	470
EBC 6310-6	63	10	6.35	64.75	57.7	6×1	87.9	242.1	1140
EBC 6320-3	63	20	9.525	65.7	56.0	3×1	104.4	229.3	1470

Note) ★ Basic Dynamic Load Rating(Ca) of the accuracy C7 and Ct7 is 0.9Ca.

Model number coding

EB C 20 05 -6 QZ RR G0 +650L C3

- EB: Nut type: over-ball preloaded type or non-preloaded type
- C: Flange shape: A: round; B: double chamfered; C: single chamfered
- 20: Shaft diameter
- 05: Lead
- -6: Number of turns
- QZ: With QZ Lubricator (no symbol without QZ Lubricator)
- RR: Seal symbol (RR : Labyrinth seal, WW : Wiper ring.)
- G0: Clearance symbol
- +650L: Ball screw shaft length (mm)
- C3: Accuracy symbol

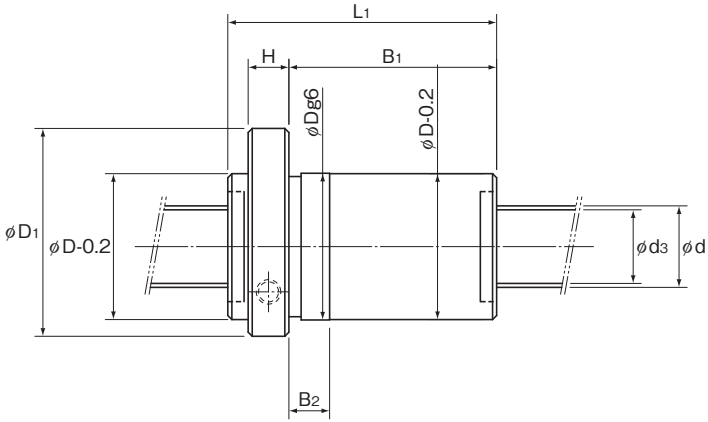

Unit: mm

	Nut dimensions										
	Outer diameter D	Flange diameter D_1	Overall length L_1	H	B_1	B_2	Hole type	PCD	d_1	Tw	Greasing hole A
	28	48	55	10	40	12	1	38	5.5	20	M6×1
	36	58	50	10	35	12	1	47	6.6	22	M6×1
	40	62	50	10	35	12	1	51	6.6	24	M6×1
	40	62	80	10	65	18	1	51	6.6	24	M6×1
	40	62	85	10	70	18	1	51	6.6	24	M6×1
	50	80	52	12	35	12	1	65	9	31	M6×1
	50	80	57	12	40	12	1	65	9	31	M6×1
	50	80	67	12	50	12	1	65	9	31	M6×1
	50	80	82	12	65	18	1	65	9	31	M6×1
	50	80	94	12	77	18	1	65	9	31	M6×1
	63	93	70	14	51	12	2	78	9	35	M8×1
	63	93	84	14	65	18	2	78	9	35	M8×1
	63	93	94	14	75	18	2	78	9	35	M8×1
	63	93	129	14	105	25	2	78	9	35	M8×1
	75	110	96	16	75	18	2	93	11	42.5	M8×1
	75	110	134	16	108	27	2	93	11	42.5	M8×1
	90	125	119	18	96	18	2	108	11	47.5	M8×1
	95	135	136	18	108	27	2	115	13.5	50	M8×1

Note) The rigidity values in the table represent spring constants each obtained from the load and the Elastic Deformation finish when providing an axial load 24% of the basic dynamic load rating (Ca).
These values do not include the rigidity of the components related to mounting the nut. Therefore, it is normally appropriate to regard roughly 80% of the value in the table as the actual value.
If the axial load (Fa) is not 0.24 Ca, the rigidity value (K_N) is obtained from the following equation.

$$K_N = K\left(\frac{Fa}{0.24Ca}\right)^{\frac{1}{3}}$$

K: Rigidity value in the dimensional table.

Model EPA (Offset Preload Type)

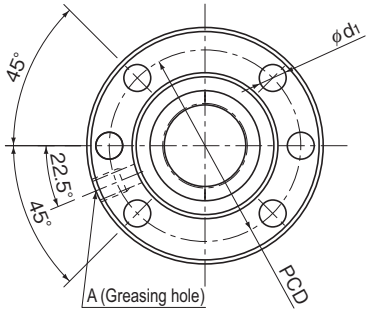

Hole type 1
(Model EPA1605 to 3210)

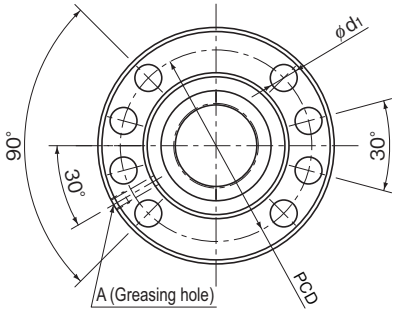

Hole type 2
(Model EPA4005 to 6310)

Model No.	Screw shaft outer diameter d	Lead ℓ	Ball diameter Da	Ball center-to-center diameter dp	Thread minor diameter d_3	No. of loaded circuits Rows x turns	Basic load rating Ca★ kN	Basic load rating C_0a kN	Rigidity K N/μm
EPA 1605-6	16	5	3.175	16.75	13.1	3×1	9.3	13.1	317
EPA 2005-6	20	5	3.175	20.75	17.1	3×1	10.6	17.3	310
EPA 2505-6	25	5	3.175	25.75	22.1	3×1	12.1	22.6	490
EPA 2510-4	25	10	3.969	26	21.6	2×1	11.3	18	330
EPA 3205-6	32	5	3.175	32.75	29.2	3×1	13.9	30.2	620
EPA 3205-8	32	5	3.175	32.75	29.2	4×1	17.8	40.3	810
EPA 3210-6	32	10	6.35	33.75	26.4	3×1	32.1	52.2	600
EPA 4005-6	40	5	3.175	40.75	37.1	3×1	15.4	38.8	298
EPA 4010-6	40	10	6.35	41.75	34.7	3×1	37.3	69.3	750
EPA 4010-8	40	10	6.35	41.75	34.7	4×1	47.6	92.4	1000
EPA 5010-8	50	10	6.35	51.75	44.4	4×1	54.3	120.5	1230
EPA 6310-8	63	10	6.35	64.75	57.7	4×1	61.9	160.7	1550

Note) ★ Basic Dynamic Load Rating(Ca) of the accuracy C7 and Ct7 is 0.9Ca.

Model number coding

EP A 20 05 -6 QZ RR G0 +650L C3

- EP: Nut type: offset preloaded type
- A: Flange shape: A: round; B: double chamfered; C: single chamfered
- 20: Shaft diameter
- 05: Number of turns
- -6: Lead
- QZ: With QZ Lubricator (no symbol without QZ Lubricator)
- RR: Seal symbol (RR : Labyrinth seal, WW : Wiper ring.)
- G0: Clearance symbol
- +650L: Ball screw shaft length (mm)
- C3: Accuracy symbol

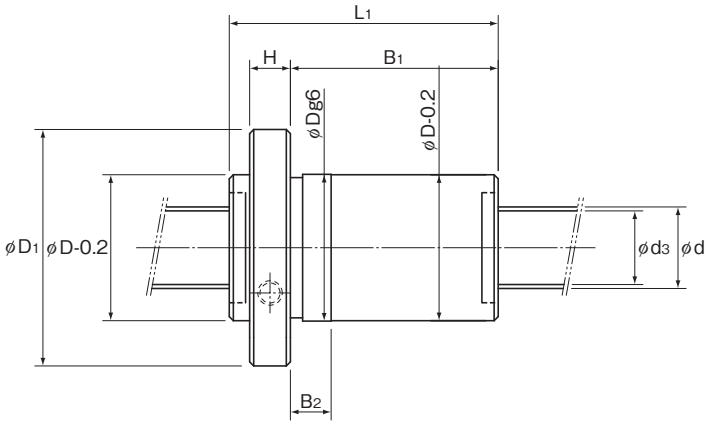

Unit: mm

	Nut dimensions										
	Outer diameter D	Flange diameter D_1	Overall length L_1	H	B_1	B_2	Hole type	PCD	d_1	Tw	Greasing hole A
	28	48	65	10	50	12	1	38	5.5	20	M6×1
	36	58	66	10	51	12	1	47	6.6	22	M6×1
	40	62	66	10	51	12	1	51	6.6	24	M6×1
	40	62	85	10	70	18	1	51	6.6	24	M6×1
	50	80	67	12	50	12	1	65	9	31	M6×1
	50	80	78	12	61	12	1	65	9	31	M6×1
	50	80	112	12	95	18	1	65	9	31	M6×1
	63	93	70	14	51	12	2	78	9	35	M8×1
	63	93	114	14	95	18	2	78	9	35	M8×1
	63	93	138	14	119	18	2	78	9	35	M8×1
	75	110	140	16	119	18	2	93	11	42.5	M8×1
	90	125	142	18	119	18	2	108	11	47.5	M8×1

Note) The rigidity values in the table represent spring constants each obtained from the load and the elastic deformation when providing a preload 8% of the basic dynamic load rating (Ca) and applying an axial load three times greater than the preload. These values do not include the rigidity of the components related to mounting the nut. Therefore, it is normally appropriate to regard roughly 80% of the value in the table as the actual value.
If the applied preload (Fa0) is not 0.08 Ca, the rigidity value (K_N) is obtained from the following equation.

$$K_N = K\left(\frac{Fa0}{0.08Ca}\right)^{\frac{1}{3}}$$

K: Rigidity value in the dimensional table.

Model EPB (Offset Preload Type)

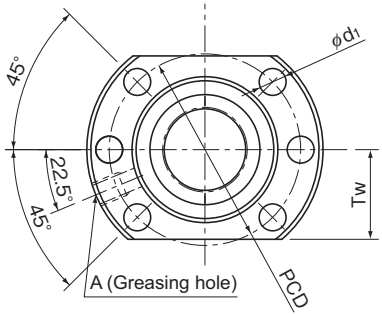

Hole type 1
(Model EPB1605 to 3210)

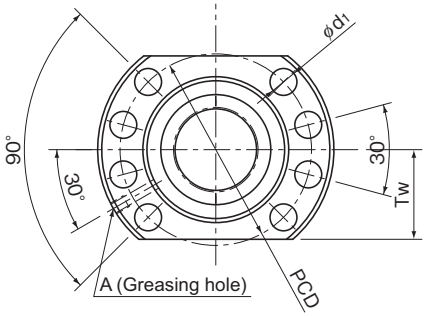

Hole type 2
(Model EPB4005 to 6310)

Model No.	Screw shaft outer diameter d	Lead ℓ	Ball diameter Da	Ball center-to-center diameter dp	Thread minor diameter d_3	No. of loaded circuits Rows x turns	Basic load rating Ca★ kN	Basic load rating C_0a kN	Rigidity K N/μm
EPB 1605-6	16	5	3.175	16.75	13.1	3×1	9.3	13.1	317
EPB 2005-6	20	5	3.175	20.75	17.1	3×1	10.6	17.3	310
EPB 2505-6	25	5	3.175	25.75	22.1	3×1	12.1	22.6	490
EPB 2510-4	25	10	3.969	26	21.6	2×1	11.3	18	330
EPB 3205-6	32	5	3.175	32.75	29.2	3×1	13.9	30.2	620
EPB 3205-8	32	5	3.175	32.75	29.2	4×1	17.8	40.3	810
EPB 3210-6	32	10	6.35	33.75	26.4	3×1	32.1	52.2	600
EPB 4005-6	40	5	3.175	40.75	37.1	3×1	15.4	38.8	298
EPB 4010-6	40	10	6.35	41.75	34.7	3×1	37.3	69.3	750
EPB 4010-8	40	10	6.35	41.75	34.7	4×1	47.6	92.4	1000
EPB 5010-8	50	10	6.35	51.75	44.4	4×1	54.3	120.5	1230
EPB 6310-8	63	10	6.35	64.75	57.7	4×1	61.9	160.7	1550

Note) ★ Basic Dynamic Load Rating(Ca) of the accuracy C7 and Ct7 is 0.9Ca.

Model number coding

EP B 20 05 -6 QZ RR G0 +650L C3

- EP: Nut type: offset preloaded type
- B: Flange shape: A: round; B: double chamfered; C: single chamfered
- 20: Shaft diameter
- 05: Number of turns
- -6: Lead
- QZ: With QZ Lubricator (no symbol without QZ Lubricator)
- RR: Seal symbol (RR : Labyrinth seal, WW : Wiper ring.)
- G0: Clearance symbol
- +650L: Ball screw shaft length (mm)
- C3: Accuracy symbol

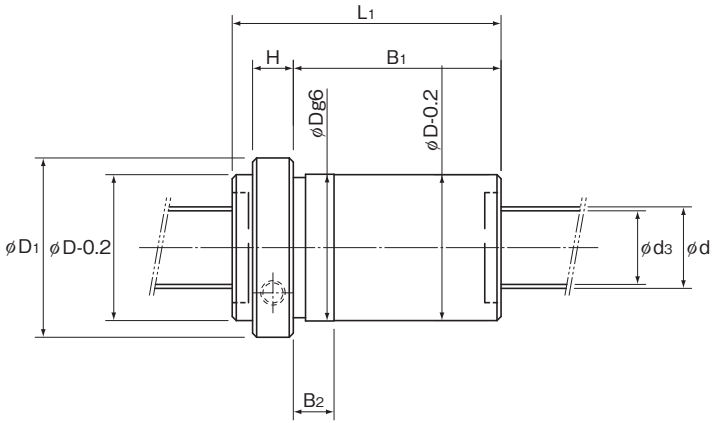

Unit: mm

	Nut dimensions										
	Outer diameter D	Flange diameter D_1	Overall length L_1	H	B_1	B_2	Hole type	PCD	d_1	Tw	Greasing hole A
	28	48	65	10	50	12	1	38	5.5	20	M6×1
	36	58	66	10	51	12	1	47	6.6	22	M6×1
	40	62	66	10	51	12	1	51	6.6	24	M6×1
	40	62	85	10	70	18	1	51	6.6	24	M6×1
	50	80	67	12	50	12	1	65	9	31	M6×1
	50	80	78	12	61	12	1	65	9	31	M6×1
	50	80	112	12	95	18	1	65	9	31	M6×1
	63	93	70	14	51	12	2	78	9	35	M8×1
	63	93	114	14	95	18	2	78	9	35	M8×1
	63	93	138	14	119	18	2	78	9	35	M8×1
	75	110	140	16	119	18	2	93	11	42.5	M8×1
	90	125	142	18	119	18	2	108	11	47.5	M8×1

Note) The rigidity values in the table represent spring constants each obtained from the load and the elastic deformation when providing a preload 8% of the basic dynamic load rating (Ca) and applying an axial load three times greater than the preload. These values do not include the rigidity of the components related to mounting the nut. Therefore, it is normally appropriate to regard roughly 80% of the value in the table as the actual value.
If the applied preload (Fa0) is not 0.08 Ca, the rigidity value (K_N) is obtained from the following equation.

$$K_N = K\left(\frac{Fa0}{0.08Ca}\right)^{\frac{1}{3}}$$

K: Rigidity value in the dimensional table.

Model EPC (Offset Preload Type)

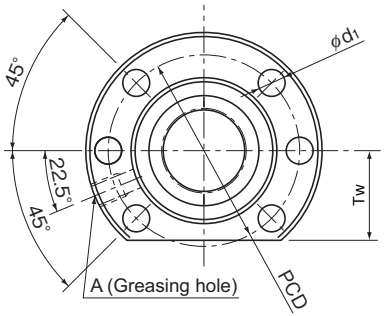

Hole type 1
(Model EPC1605 to 3210)

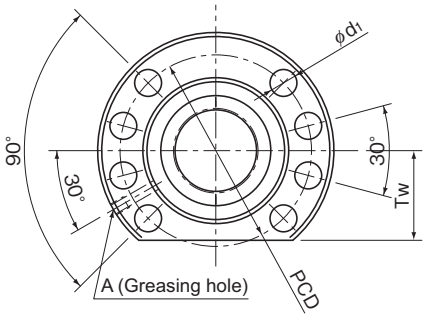

Hole type 2
(Model EPC4005 to 6310)

Model No.	Screw shaft outer diameter	Lead	Ball diameter	Ball center-to-center diameter	Thread minor diameter	No. of loaded circuits	Basic load rating		Rigidity
							Ca★	C_0a	K
	d	ℓ	Da	dp	d_3	Rows x turns	kN	kN	N/μm
EPC 1605-6	16	5	3.175	16.75	13.1	3×1	9.3	13.1	317
EPC 2005-6	20	5	3.175	20.75	17.1	3×1	10.6	17.3	310
EPC 2505-6	25	5	3.175	25.75	22.1	3×1	12.1	22.6	490
EPC 2510-4	25	10	3.969	26	21.6	2×1	11.3	18	330
EPC 3205-6	32	5	3.175	32.75	29.2	3×1	13.9	30.2	620
EPC 3205-8	32	5	3.175	32.75	29.2	4×1	17.8	40.3	810
EPC 3210-6	32	10	6.35	33.75	26.4	3×1	32.1	52.2	600
EPC 4005-6	40	5	3.175	40.75	37.1	3×1	15.4	38.8	298
EPC 4010-6	40	10	6.35	41.75	34.7	3×1	37.3	69.3	750
EPC 4010-8	40	10	6.35	41.75	34.7	4×1	47.6	92.4	1000
EPC 5010-8	50	10	6.35	51.75	44.4	4×1	54.3	120.5	1230
EPC 6310-8	63	10	6.35	64.75	57.7	4×1	61.9	160.7	1550

Note) ★ Basic Dynamic Load Rating(Ca) of the accuracy C7 and Ct7 is 0.9Ca.

Model number coding

EP C 20 05 -6 QZ RR G0 +650L C3

- Shaft diameter
- Number of turns
- Lead
- Clearance symbol
- Accuracy symbol
- Ball screw shaft length (mm)
- Seal symbol (RR : Labyrinth seal, WW : Wiper ring.)
- With QZ Lubricator (no symbol without QZ Lubricator)
- Flange shape: A: round; B: double chamfered; C: single chamfered
- Nut type: offset preloaded type

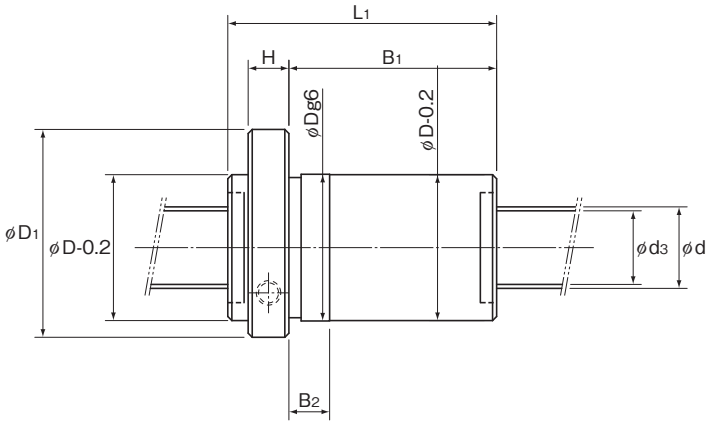

Unit: mm

	Nut dimensions										
	Outer diameter D	Flange diameter D_1	Overall length L_1	H	B_1	B_2	Hole type	PCD	d_1	Tw	Greasing hole A
	28	48	65	10	50	12	1	38	5.5	20	M6×1
	36	58	66	10	51	12	1	47	6.6	22	M6×1
	40	62	66	10	51	12	1	51	6.6	24	M6×1
	40	62	85	10	70	18	1	51	6.6	24	M6×1
	50	80	67	12	50	12	1	65	9	31	M6×1
	50	80	78	12	61	12	1	65	9	31	M6×1
	50	80	112	12	95	18	1	65	9	31	M6×1
	63	93	70	14	51	12	2	78	9	35	M8×1
	63	93	114	14	95	18	2	78	9	35	M8×1
	63	93	138	14	119	18	2	78	9	35	M8×1
	75	110	140	16	119	18	2	93	11	42.5	M8×1
	90	125	142	18	119	18	2	108	11	47.5	M8×1

Note) The rigidity values in the table represent spring constants each obtained from the load and the elastic deformation when providing a preload 8% of the basic dynamic load rating (Ca) and applying an axial load three times greater than the preload. These values do not include the rigidity of the components related to mounting the nut. Therefore, it is normally appropriate to regard roughly 80% of the value in the table as the actual value.
If the applied preload (Fa0) is not 0.08 Ca, the rigidity value (K_N) is obtained from the following equation.

$$K_N = K\left(\frac{Fa0}{0.08Ca}\right)^{\frac{1}{3}}$$

K: Rigidity value in the dimensional table.

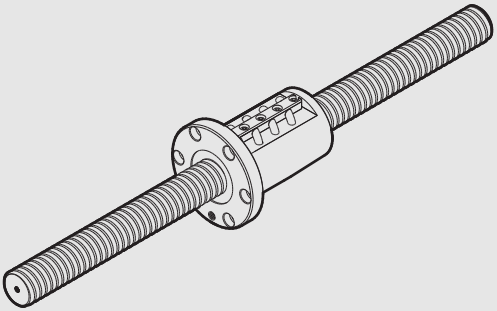

Standard-Stock Precision Ball Screw Unfinished Shaft Ends
Models BIF, BNFN, MDK, MBF and BNF

Ball Screw

B Product Specifications

Dimensional Drawing, Dimensional Table

Unfinished Shaft Ends..... B15-30 | B15-50

Options

Dimensions of the Ball Screw Nut Attached with Wiper Ring W and QZ Lubricator B15-228

A Technical Descriptions of the Products (Separate)

Technical Descriptions

Structure and Features A15-103

Types and Features A15-104

Service Life A15-44

Nut Types and Axial Clearance..... A15-106

* Please see the separate "A Technical Descriptions of the Products".

Unfinished Shaft Ends

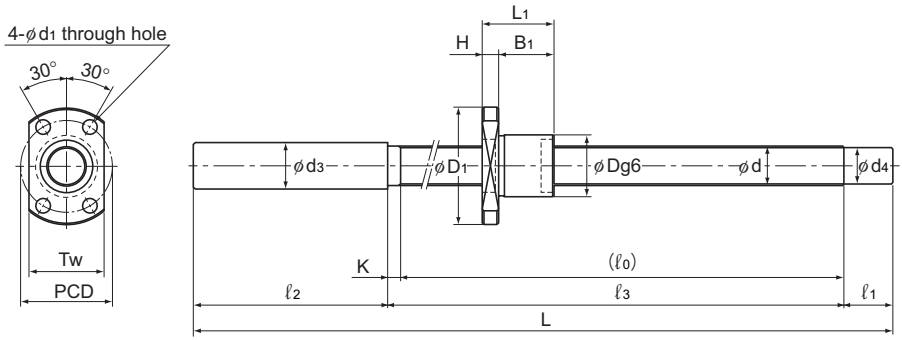

Model MDK

Model No.	Ball screw specifications							Nut			
	Screw shaft outer diameter	Lead	Ball center-to-center diameter	Thread minor diameter	No. of loaded circuits	Basic load rating		Outer diameter	Flange diameter	Overall length	
						Ca	C_0a				
	d	Ph	dp	dc	Rows x turns	kN	kN	D	D_1	L_1	H
MDK 0401-3	4	1	4.15	3.4	3×1	0.29	0.42	9	19	13	3
MBF 0401-3.7	4	1	4.15	3.2	1×3.7	0.59	0.93	11	24	18	4
MDK 0601-3	6	1	6.2	5.3	3×1	0.54	0.94	11	23	14.5	3.5
MBF 0601-3.7	6	1	6.15	5.2	1×3.7	0.74	1.5	13	30	21	5

Note) Models MDK/MBF 0401 and 0601 are not provided with a labyrinth seal.

Model number coding

MDK0401-3 GT +95L C5 A

- MDK0401-3: Model number
- GT: Symbol for clearance in the axial direction (*1)
- +95L: Overall screw shaft length (in mm)
- C5: Accuracy symbol (*2)
- A: Symbol for standard-stock type (A: with unfinished shaft ends)

(*1) See A15-25. (*2) See A15-18.

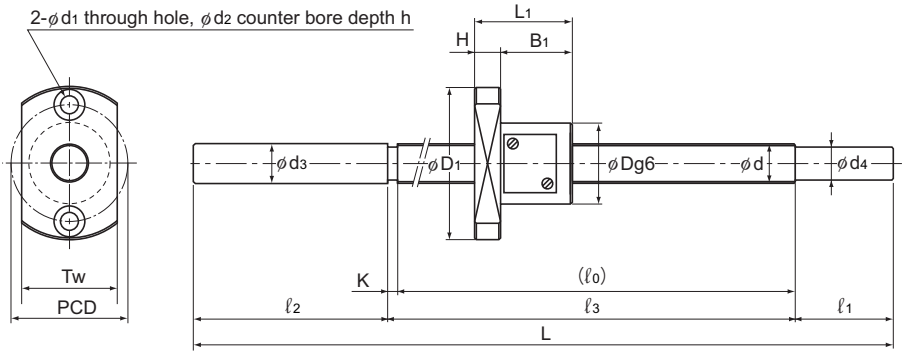

Model MBF

Unit: mm

Dimensions							Screw shaft dimensions									Nut mass	Shaft mass
	B_1	PCD	d_1	d_2	h	Tw	Standard-stock symbol	Overall length L	ℓ_0	ℓ_1	ℓ_2	ℓ_3	d_3	d_4	K	kg	kg/m
	10	14	2.9	—	—	13	A	95	47	10	35	50	6.2	3.2	3	0.01	0.07
								115	67	10	35	70	6.2	3.2	3	0.01	0.07
								145	97	10	35	100	6.2	3.2	3	0.01	0.07
	14	17	3.4	6.5	2.5	13	A	90	48	10	30	50	4.3	3.2	2	0.02	0.07
								110	68	10	30	70	4.3	3.2	2	0.02	0.07
								130	88	10	30	90	4.3	3.2	2	0.02	0.07
	11	17	3.4	—	—	15	A	120	67	10	40	70	8.2	5.3	3	0.02	0.14
								150	97	10	40	100	8.2	5.3	3	0.02	0.14
								180	127	10	40	130	8.2	5.3	3	0.02	0.14
	16	21.5	3.4	6.5	3	17	A	131	58	20	50	61	6.3	5.2	3	0.04	0.14
								161	88	20	50	91	6.3	5.2	3	0.04	0.14
								201	128	20	50	131	6.3	5.2	3	0.04	0.14

Unfinished Shaft Ends

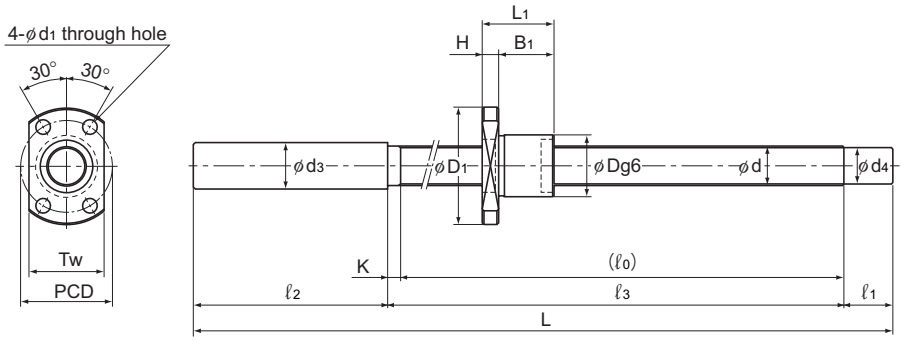

Model MDK

Model No.	Ball screw specifications							Nut			
	Screw shaft outer diameter	Lead	Ball center-to-center diameter	Thread minor diameter	No. of loaded circuits	Basic load rating		Outer diameter	Flange diameter	Overall length	
						Ca	C_0a				
	d	Ph	dp	dc	Rows x turns	kN	kN	D	D_1	L_1	H
MDK 0801-3	8	1	8.2	7.3	3×1	0.64	1.4	13	26	15	4
MDK 0802-3	8	2	8.3	7	3×1	1.4	2.3	15	28	22	5
MBF 0802-3.7	8	2	8.3	6.4	1×3.7	2.5	4.2	20	40	28	6

Note) Model MDK 0801 is not provided with a labyrinth seal.

Model number coding

MBF0802-3.7 RR GT +218L C5 A

- MBF0802-3.7: Model number
- RR: Seal symbol (*1)
- GT: Symbol for clearance in the axial direction (*2)
- +218L: Overall screw shaft length (in mm)
- C5: Accuracy symbol (*3)
- A: Symbol for standard-stock type (A: with unfinished shaft ends)

(*1) See A15-166. (*2) See A15-25. (*3) See A15-18.

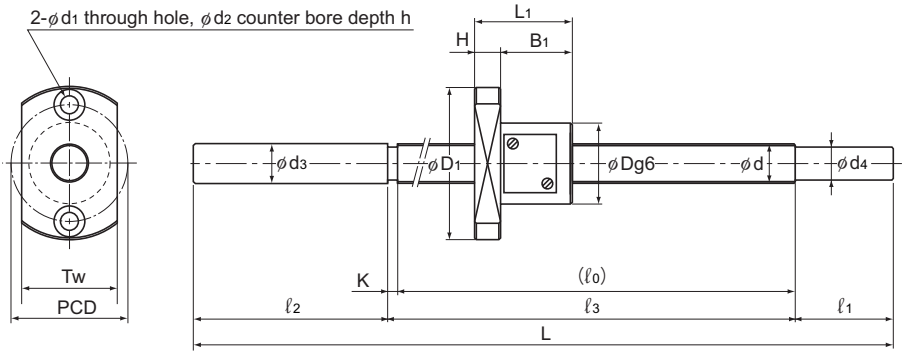

Model MBF

Unit: mm

Dimensions							Screw shaft dimensions									Nut mass	Shaft mass
	B_1	PCD	d_1	d_2	h	Tw	Standard-stock symbol	Overall length L	ℓ_0	ℓ_1	ℓ_2	ℓ_3	d_3	d_4	K	kg	kg/m
	11	20	3.4	—	—	17	A	130	67	15	45	70	10.2	7.3	3	0.02	0.29
								160	97	15	45	100	10.2	7.3	3	0.02	0.29
								190	127	15	45	130	10.2	7.3	3	0.02	0.29
								240	177	15	45	180	10.2	7.3	3	0.02	0.29
	17	22	3.4	—	—	19	A	140	76	15	45	80	10.2	7	4	0.04	0.27
								170	106	15	45	110	10.2	7	4	0.04	0.27
								200	136	15	45	140	10.2	7	4	0.04	0.27
								250	186	15	45	190	10.2	7	4	0.04	0.27
	22	30	4.5	8	4	24	A	168	85	25	55	88	8.3	6.2	3	0.1	0.19
								193	110	25	55	113	8.3	6.2	3	0.1	0.19
								218	135	25	55	138	8.3	6.2	3	0.1	0.19

Unfinished Shaft Ends

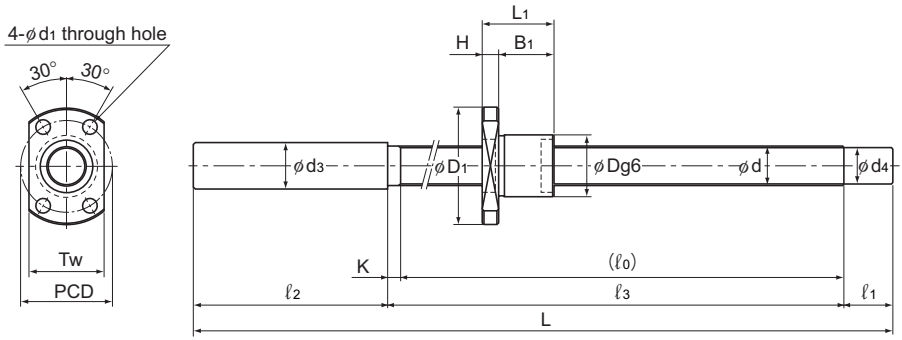

Model MDK

Model No.	Ball screw specifications							Nut			
	Screw shaft outer diameter	Lead	Ball center-to-center diameter	Thread minor diameter	No. of loaded circuits	Basic load rating		Outer diameter	Flange diameter	Overall length	
						Ca	C_0a				
	d	Ph	dp	dc	Rows x turns	kN	kN	D	D_1	L_1	H
MDK 1002-3	10	2	10.3	9	3×1	1.5	2.9	17	34	22	5
MBF 1002-3.7	10	2	10.3	8.6	1×3.7	2.8	5.3	23	43	28	6
MDK 1202-3	12	2	12.3	11	3×1	1.7	3.6	19	36	22	5
MBF 1202-3.7	12	2	12.3	10.6	1×3.7	3	6.5	25	47	30	8

Model number coding

MDK1202-3 RR GT +165L C5 A

- MDK1202-3: Model number
- RR: Seal symbol (*1)
- GT: Symbol for clearance in the axial direction (*2)
- +165L: Overall screw shaft length (in mm)
- C5: Accuracy symbol (*3)
- A: Symbol for standard-stock type (A: with unfinished shaft ends)

(*1) See A15-166. (*2) See A15-25. (*3) See A15-18.

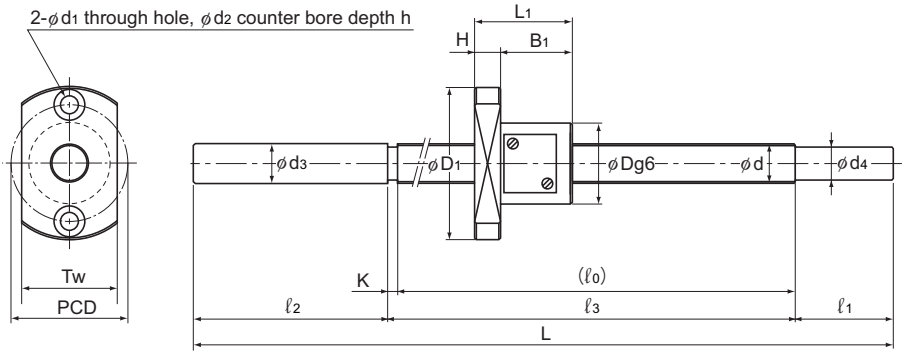

Model MBF

Unit: mm

Dimensions							Screw shaft dimensions									Nut mass	Shaft mass
	B_1	PCD	d_1	d_2	h	Tw	Standard-stock symbol	Overall length L	ℓ_0	ℓ_1	ℓ_2	ℓ_3	d_3	d_4	K	kg	kg/m
	17	26	4.5	—	—	21	A	160	86	15	55	90	12.2	9	4	0.05	0.47
								210	136	15	55	140	12.2	9	4	0.05	0.47
								260	186	15	55	190	12.2	9	4	0.05	0.47
								310	236	15	55	240	12.2	9	4	0.05	0.47
	22	33	4.5	8	4	27	A	183	95	25	60	98	10.3	8.2	3	0.11	0.36
								223	135	25	60	138	10.3	8.2	3	0.11	0.36
								273	185	25	60	188	10.3	8.2	3	0.11	0.36
	17	28	4.5	—	—	23	A	165	86	15	60	90	14.2	11	4	0.05	0.71
								215	136	15	60	140	14.2	11	4	0.05	0.71
								265	186	15	60	190	14.2	11	4	0.05	0.71
								315	236	15	60	240	14.2	11	4	0.05	0.71
								365	286	15	60	290	14.2	11	4	0.05	0.71
	22	36	5.5	9.5	5.5	29	A	210	117	30	60	120	12.3	10.2	3	0.15	0.58
								235	142	30	60	145	12.3	10.2	3	0.15	0.58
								285	192	30	60	195	12.3	10.2	3	0.15	0.58

Unfinished Shaft Ends

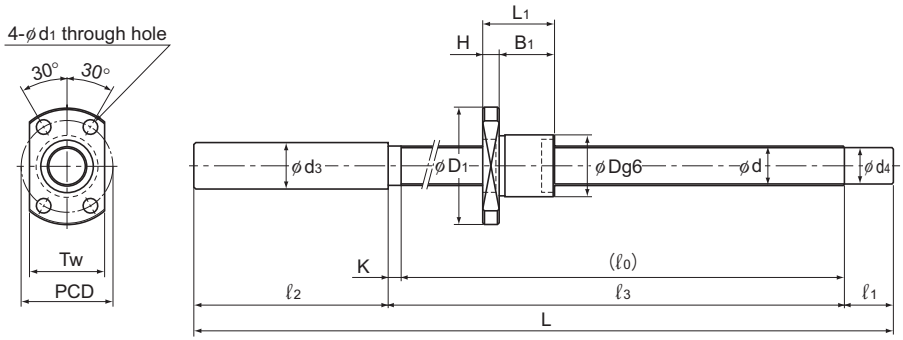

Model MDK

Model No.	Ball screw specifications							Nut			
	Screw shaft outer diameter	Lead	Ball center-to-center diameter	Thread minor diameter	No. of loaded circuits	Basic load rating		Outer diameter	Flange diameter	Overall length	
						Ca	C_0a				
	d	Ph	dp	dc	Rows x turns	kN	kN	D	D_1	L_1	H
MDK 1402-3	14	2	14.3	13	3×1	1.8	4.3	21	40	23	6
MBF 1402-3.7	14	2	14.3	12.5	1×3.7	3.3	7.5	26	48	30	8

Model number coding

MBF1402-3.7 RR GT +245L C3 A

- MBF1402-3.7: Model number
- RR: Seal symbol (*1)
- GT: Symbol for clearance in the axial direction (*2)
- +245L: Overall screw shaft length (in mm)
- C3: Accuracy symbol (*3)
- A: Symbol for standard-stock type (A: with unfinished shaft ends)

(*1) See A15-166. (*2) See A15-25. (*3) See A15-18.

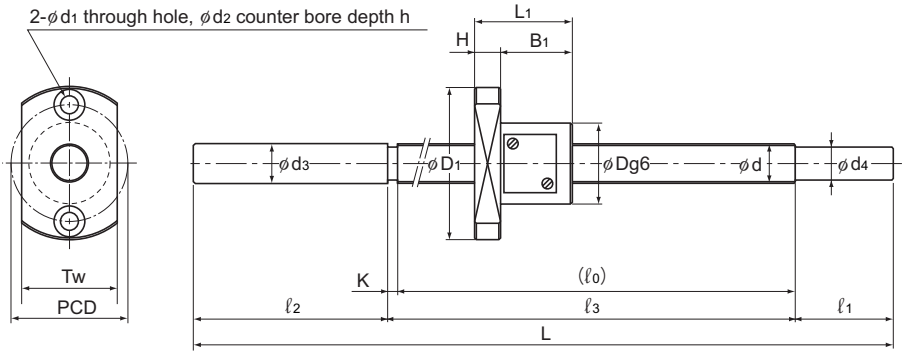

Model MBF

Unit: mm

Dimensions							Screw shaft dimensions									Nut mass	Shaft mass
	B_1	PCD	d_1	d_2	h	Tw	Standard-stock symbol	Overall length L	ℓ_0	ℓ_1	ℓ_2	ℓ_3	d_3	d_4	K	kg	kg/m
	17	31	5.5	—	—	26	A	175	86	25	60	90	15.2	13	4	0.07	1.0
								225	136	25	60	140	15.2	13	4	0.07	1.0
								275	186	25	60	190	15.2	13	4	0.07	1.0
								325	236	25	60	240	15.2	13	4	0.07	1.0
								425	336	25	60	340	15.2	13	4	0.07	1.0
	22	37	5.5	9.5	5.5	32	A	205	102	40	60	105	14.3	12.2	3	0.16	0.85
								245	142	40	60	145	14.3	12.2	3	0.16	0.85
								295	192	40	60	195	14.3	12.2	3	0.16	0.85
								345	242	40	60	245	14.3	12.2	3	0.16	0.85

Unfinished Shaft Ends

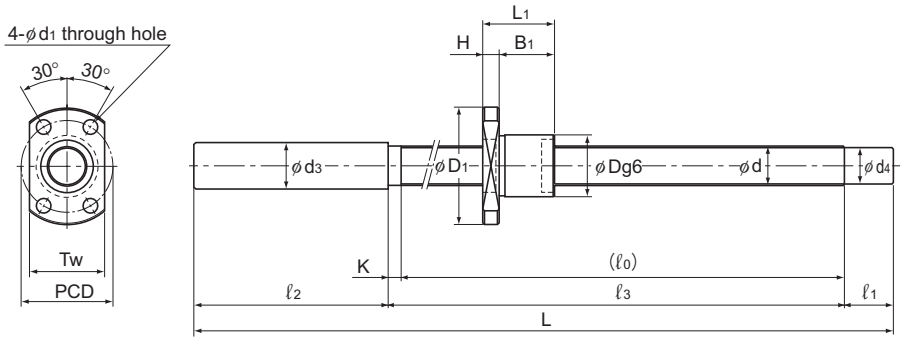

Model MDK

Model No.	Ball screw specifications							Nut			
	Screw shaft outer diameter	Lead	Ball center-to-center diameter	Thread minor diameter	No. of loaded circuits	Basic load rating		Outer diameter	Flange diameter	Overall length	
						Ca	C_0a				
	d	Ph	dp	dc	Rows x turns	kN	kN	D	D_1	L_1	H
MDK 1404-3	14	4	14.65	11.9	3×1	4.2	7.6	26	45	33	6
MBF 1404-3.7	14	4	14.3	11.8	1×3.7	5.7	11.1	30	54	38	8
MDK 1405-3	14	5	14.75	11.2	3×1	7	11.6	26	45	42	10

Model number coding

MDK1404-3 RR G2 +240L C7 A

Model number | Seal symbol (*1) | Overall screw shaft length (in mm) | Symbol for clearance in the axial direction (*2) | Accuracy symbol (*3) | Symbol for standard-stock type (A: with unfinished shaft ends)

(*1) See A15-166. (*2) See A15-25. (*3) See A15-18.

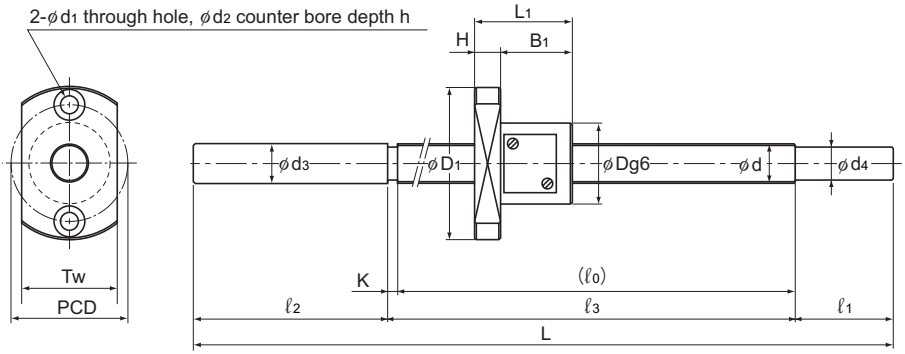

Model MBF

Unit: mm

Dimensions							Screw shaft dimensions									Nut mass	Shaft mass
	B_1	PCD	d_1	d_2	h	Tw	Standard-stock symbol	Overall length L	ℓ_0	ℓ_1	ℓ_2	ℓ_3	d_3	d_4	K	kg	kg/m
	27	36	5.5	—	—	28	A	240	150	25	60	155	15.2	11.9	5	0.14	0.8
								290	200	25	60	205	15.2	11.9	5	0.14	0.8
								340	250	25	60	255	15.2	11.9	5	0.14	0.8
								440	350	25	60	355	15.2	11.9	5	0.14	0.8
								540	450	25	60	455	15.2	11.9	5	0.14	0.8
	30	42	5.5	9.5	5.5	34	A	233	129	40	60	133	14.3	11.2	4	0.25	1.2
								293	189	40	60	193	14.3	11.2	4	0.25	1.2
								353	249	40	60	253	14.3	11.2	4	0.25	1.2
								413	309	40	60	313	14.3	11.2	4	0.25	1.2
	32	36	5.5	—	—	28	A	250	160	25	60	165	14	11.2	5	0.19	1.2
								300	210	25	60	215	14	11.2	5	0.19	1.2
								350	260	25	60	265	14	11.2	5	0.19	1.2
								450	360	25	60	365	14	11.2	5	0.19	1.2
								550	460	25	60	465	14	11.2	5	0.19	1.2

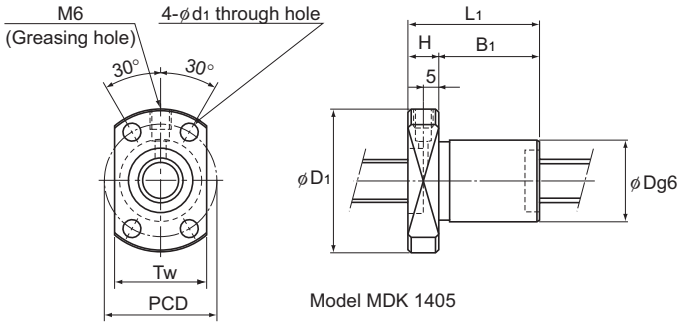

Model MDK 1405

Unfinished Shaft Ends

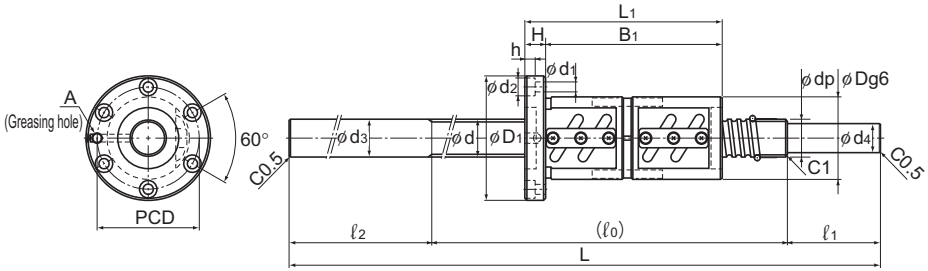

Model BNFN

Model No.	Ball screw specifications								Nut			
	Screw shaft outer diameter	Lead	Ball center-to-center diameter	Thread minor diameter	No. of loaded circuits	Basic load rating		Applied preload	Outer diameter	Flange diameter	Overall length	Mass
						Ca	C_0a					
	d	Ph	dp	dc	Rows x turns	kN	kN	N	D	D_1	L_1	kg
BNFN 1605-2.5 BNF 1605-2.5 BIF 1605-5	16	5	16.75	13.2	1×2.5	7.4	13.9	390 — 390	40	60	76 41 56	0.6 0.37 0.56
BNFN 1810-2.5 BNF 1810-2.5 BIF 1810-3	18	10	18.8	15.5	1×2.5 1×2.5 1×1.5	7.8 7.8 5.1	15.9 15.9 9.6	390 — 250	42	65	119 69 75	1.0 0.67 0.75
BNFN 2005-5 BNF 2005-5 BIF 2005-5	20	5	20.75	17.2	2×2.5 2×2.5 1×2.5	15.1 15.1 8.3	35 35 17.4	740 — 440	44	67	106 56 56	0.9 0.57 0.57

Model number coding

BNFN2005-5 RR G0 +610L C5 A

- BNFN2005-5: Model number
- RR: Seal symbol (*1)
- G0: Symbol for clearance in the axial direction (*2)
- +610L: Overall screw shaft length (in mm)
- C5: Accuracy symbol (*3)
- A: Symbol for standard-stock type (symbol A or B)

(*1) See A15-166. (*2) See A15-25. (*3) See A15-18.

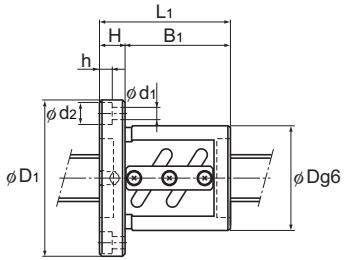

Model BNF

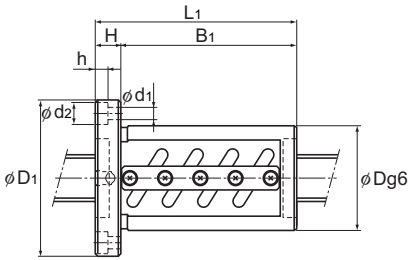

Model BIF

Unit: mm

Dimensions								Screw shaft dimensions							Shaft mass
	H	B_1	PCD	d_1	d_2	h	Greasing hole A	Standard-stock symbol	Overall length L	ℓ_0	ℓ_1	ℓ_2	d_3	d_4	kg/m
	10	66 31 46	50	4.5	8	4.5	M6	A	410	200	50	160	16	12.8	0.92
									510	300	50	160	16	12.8	0.92
									610	400	50	160	16	12.8	0.92
									710	500	50	160	16	12.8	1.25
	12	107 57 63	53	5.5	9.5	5.5	M6	A	410	200	50	160	18	15.3	1.62
									510	300	50	160	18	15.3	1.62
									610	400	50	160	18	15.3	1.62
									710	500	50	160	18	15.3	1.62
									810	600	50	160	18	15.3	1.62
	11	95 45 45	55	5.5	9.5	5.5	M6	A	410	200	50	160	20	15.3	1.65
									510	300	50	160	20	15.3	1.65
									610	400	50	160	20	15.3	1.65
									710	500	50	160	20	15.3	1.65
									810	600	50	160	20	16.8	1.65
									1010	800	50	160	20	16.8	1.65
								B	610	300	50	260	20	16.8	1.65
									710	400	50	260	20	16.8	1.65

Unfinished Shaft Ends

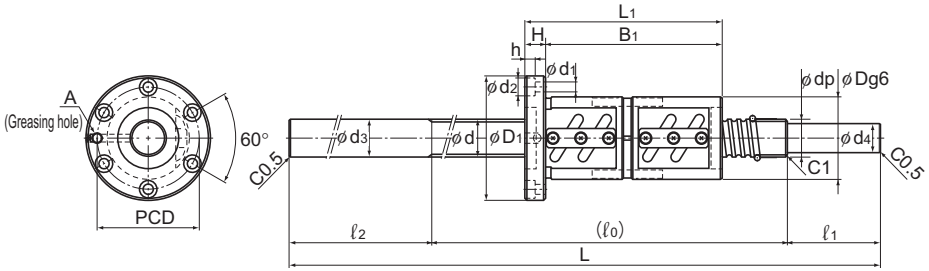

Model BNFN

Model No.	Ball screw specifications								Nut			
	Screw shaft outer diameter	Lead	Ball center-to-center diameter	Thread minor diameter	No. of loaded circuits	Basic load rating		Applied preload	Outer diameter	Flange diameter	Overall length	Mass
						Ca	C_0a					
	d	Ph	dp	dc	Rows x turns	kN	kN	N	D	D_1	L_1	kg
BNFN 2505-5 BNF 2505-5 BIF 2505-5	25	5	25.75	22.2	2×2.5 2×2.5 1×2.5	16.7 16.7 9.2	44 44 22	830 — 440	50	73	105 55 55	1.2 0.75 0.75
BNFN 2510A-2.5 BNF 2510A-2.5 BIF 2510A-5	25	10	26.3	21.4	1×2.5	15.8	33	780 — 780	58	85	120 70 100	2.0 1.43 1.87

Model number coding

BIF2505-5 RR G0 +720L C5 B

- BIF2505-5: Model number
- RR: Seal symbol (*1)
- G0: Symbol for clearance in the axial direction (*2)
- +720L: Overall screw shaft length (in mm)
- C5: Accuracy symbol (*3)
- B: Symbol for standard-stock type (symbol A or B)

(*1) See A15-166. (*2) See A15-25. (*3) See A15-18.

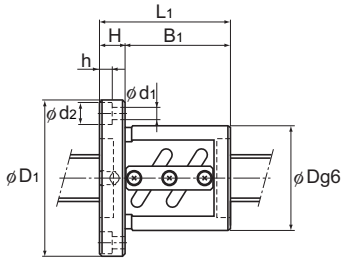

Model BNF

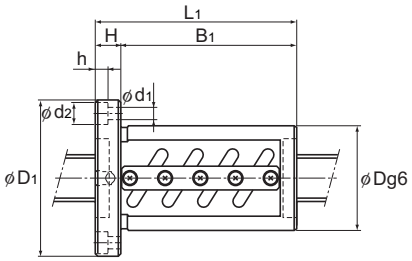

Model BIF

Unit: mm

Dimensions								Screw shaft dimensions							Shaft mass
	H	B_1	PCD	d_1	d_2	h	Greasing hole A	Standard-stock symbol	Overall length L	ℓ_0	ℓ_1	ℓ_2	d_3	d_4	kg/m
	11	94 44 44	61	5.5	9.5	5.5	M6	A	520	300	60	160	25	20.3	2.84
									620	400	60	160	25	20.3	2.84
									720	500	60	160	25	20.3	2.84
									820	600	60	160	25	20.3	2.84
									1020	800	60	160	25	21.8	2.84
									1220	1000	60	160	25	21.8	2.84
									1420	1200	60	160	25	21.8	2.84
								B	720	400	60	260	25	21.8	2.84
									820	500	60	260	25	21.8	2.84
	18	102 52 82	71	6.6	11	6.5	M6	A	620	400	60	160	25	20.3	2.68
									820	600	60	160	25	20.3	2.68
									1020	800	60	160	25	20.3	2.68
									1220	1000	60	160	25	20.3	2.68
									1420	1200	60	160	25	20.3	2.68

Unfinished Shaft Ends

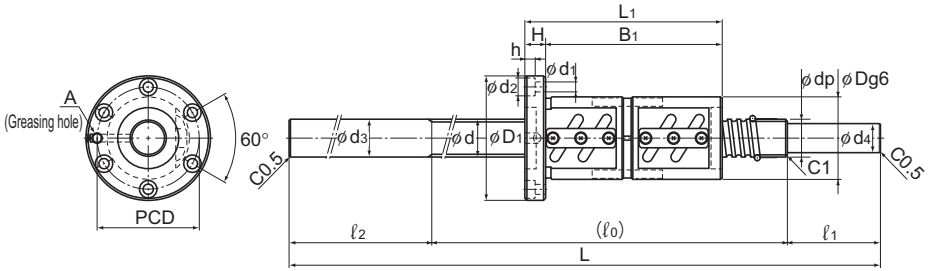

Model BNFN

Model No.	Ball screw specifications								Nut			
	Screw shaft outer diameter	Lead	Ball center-to-center diameter	Thread minor diameter	No. of loaded circuits	Basic load rating		Applied preload	Outer diameter	Flange diameter	Overall length	Mass
						Ca	C_0a					
	d	Ph	dp	dc	Rows x turns	kN	kN	N	D	D_1	L_1	kg
BNFN 2806-5	28	6	28.75	25.2	2×2.5	17.5	49.4	880	55	85	122	1.7
BNF 2806-5					2×2.5	17.5	49.4	—			68	1.13
BIF 2806-5					1×2.5	9.6	24.6	490			68	1.0
BIF 2806-10					2×2.5	17.5	49.4	880			104	1.57
BNFN 3205-5	32	5	32.75	29.2	2×2.5	18.5	56.4	930	58	85	106	1.54
BNF 3205-5					2×2.5	18.5	56.4	—			56	0.93
BIF 3205-5					1×2.5	10.2	28.1	490			56	0.87
BIF 3205-10					2×2.5	18.5	56.4	930			86	1.32

Model number coding

BNFN2806-5 RR G0 +1020L C5 A

- BNFN2806-5: Model number
- RR: Seal symbol (*1)
- G0: Symbol for clearance in the axial direction (*2)
- +1020L: Overall screw shaft length (in mm)
- C5: Accuracy symbol (*3)
- A: Symbol for standard-stock type (symbol A or B)

(*1) See A15-166. (*2) See A15-25. (*3) See A15-18.

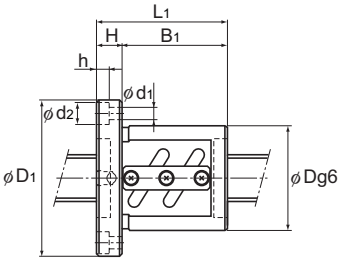

Model BNF

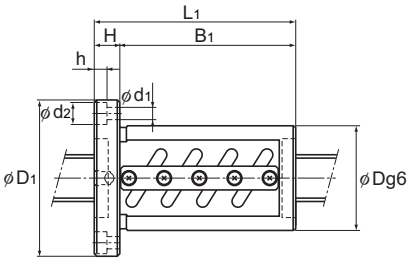

Model BIF

Unit: mm

Dimensions								Screw shaft dimensions							Shaft mass
	H	B_1	PCD	d_1	d_2	h	Greasing hole A	Standard-stock symbol	Overall length L	ℓ_0	ℓ_1	ℓ_2	d_3	d_4	kg/m
	12	110 56 56 92	69	6.6	11	6.5	M6	A	520	300	60	160	28	20.3	3.89
									620	400	60	160	28	20.3	3.89
									720	500	60	160	28	20.3	3.89
									920	700	60	160	28	20.3	3.89
									1020	800	60	160	28	24.8	3.89
									1220	1000	60	160	28	24.8	3.89
									1420	1200	60	160	28	24.8	3.89
								B	720	400	70	250	28	24.8	3.89
									920	500	70	350	28	24.8	3.89
									1100	700	70	330	28	24.8	3.89
	12	94 44 44 74	71	6.6	11	6.5	M6	A	730	500	70	160	32	25.3	5.03
									930	700	70	160	32	25.3	5.03
									1230	1000	70	160	32	25.3	5.03
									1430	1200	70	160	32	25.3	5.03
									1630	1400	70	160	32	27.8	5.03
									1830	1600	70	160	32	27.8	5.03

Unfinished Shaft Ends

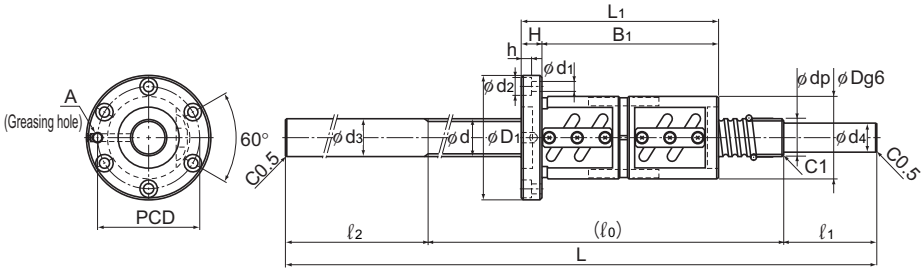

Model BNFN

Model No.	Ball screw specifications								Nut			
	Screw shaft outer diameter	Lead	Ball center-to-center diameter	Thread minor diameter	No. of loaded circuits	Basic load rating		Applied preload	Outer diameter	Flange diameter	Overall length	Mass
						Ca	C_0a					
	d	Ph	dp	dc	Rows x turns	kN	kN	N	D	D_1	L_1	kg
BNFN 3206-5 BNF 3206-5 BIF 3206-5 BIF 3206-10	32	6	33	28.4	2×2.5 2×2.5 1×2.5 2×2.5	25.2 25.2 13.9 25.2	70.4 70.4 35.2 70.4	1270 — 690 1270	62	89	123 63 63 99	2.0 1.2 1.2 1.76
BNFN 3210A-5 BNF 3210A-5 BIF 3210A-5	32	10	33.7 5	26.4	2×2.5 2×2.5 1×2.5	47.2 47.2 26.1	112.7 112.7 56.2	2350 — 1270	74	108	190 100 100	5.5 2.8 2.8

Model number coding

BNFN3206-5 RR G0 +1100L C5 B

- BNFN3206-5: Model number
- RR: Seal symbol (*1)
- G0: Symbol for clearance in the axial direction (*2)
- +1100L: Overall screw shaft length (in mm)
- C5: Accuracy symbol (*3)
- B: Symbol for standard-stock type (symbol A or B)

(*1) See A15-166. (*2) See A15-25. (*3) See A15-18.

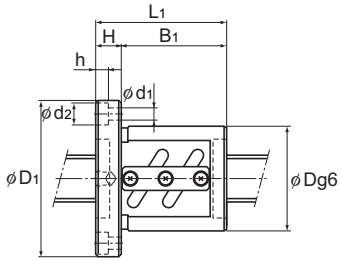

Model BNF

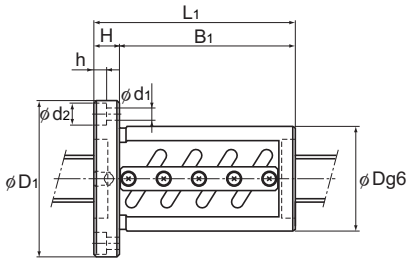

Model BIF

Unit: mm

Dimensions								Screw shaft dimensions							Shaft mass
	H	B_1	PCD	d_1	d_2	h	Greasing hole A	Standard-stock symbol	Overall length L	ℓ_0	ℓ_1	ℓ_2	d_3	d_4	kg/m
	12	111 51 51 87	75	6.6	11	6.5	M6	A	730	500	70	160	32	25.3	4.63
									930	700	70	160	32	25.3	4.63
									1230	1000	70	160	32	25.3	4.63
									1430	1200	70	160	32	25.3	4.63
									1630	1400	70	160	32	27.8	4.63
									1830	1600	70	160	32	27.8	4.63
								B	930	500	70	360	32	27.8	4.63
									1100	700	70	330	32	27.8	4.63
									1430	1000	70	360	32	27.8	4.63
	15	175 85 85	90	9	14	8.5	M6	A	730	500	70	160	32	25.3	3.66
									930	700	70	160	32	25.3	3.66
									1430	1200	70	160	32	25.3	3.66
									1830	1600	70	160	32	25.3	3.66

Unfinished Shaft Ends

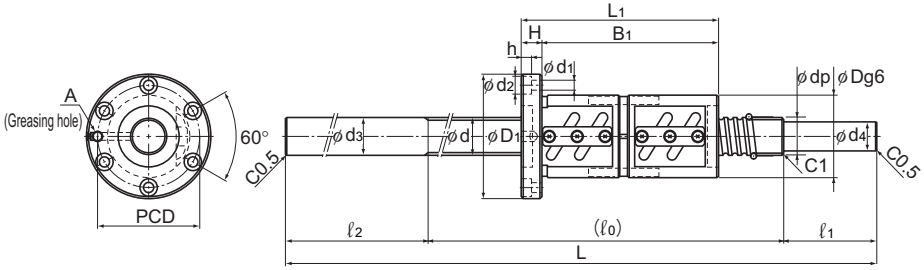

Model BNFN

Model No.	Ball screw specifications								Nut			
	Screw shaft outer diameter	Lead	Ball center-to-center diameter	Thread minor diameter	No. of loaded circuits	Basic load rating		Applied preload	Outer diameter	Flange diameter	Overall length	Mass
						Ca	C_0a					
	d	Ph	dp	dc	Rows x turns	kN	kN	N	D	D_1	L_1	kg
BNFN 3610-5 BNF 3610-5 BIF 3610-5 BIF 3610-10	36	10	37.75	30.5	2×2.5 2×2.5 1×2.5 2×2.5	50.1 50.1 27.6 50.1	126.4 126.4 63.3 126.4	2500 — 1370 2500	75	120	201 111 111 171	6.0 3.4 3.4 4.8
BNFN 4010-5 BNF 4010-5 BIF 4010-5 BIF 4010-10	40	10	41.75	34.4	2×2.5 2×2.5 1×2.5 2×2.5	52.7 52.7 29 52.7	141.1 141.1 70.4 141.1	2650 — 1470 2650	82	124	193 103 103 163	6.8 3.58 3.58 5.18

Model number coding

BIF3610-5 RR G0 +1830L C5 A

- BIF3610-5: Model number
- RR: Seal symbol (*1)
- G0: Symbol for clearance in the axial direction (*2)
- +1830L: Overall screw shaft length (in mm)
- C5: Accuracy symbol (*3)
- A: Symbol for standard-stock type (symbol A or B)

(*1) See A15-166. (*2) See A15-25. (*3) See A15-18.

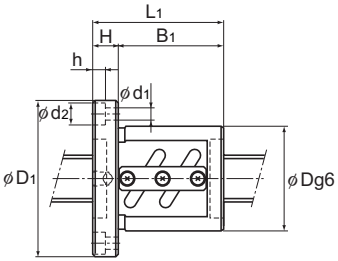

Model BNF

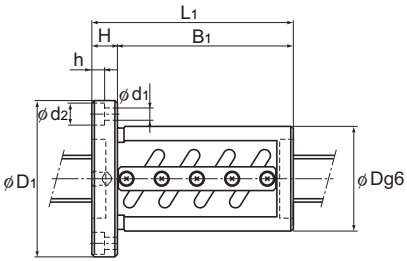

Model BIF

Unit: mm

Dimensions								Screw shaft dimensions							Shaft mass
	H	B_1	PCD	d_1	d_2	h	Greasing hole A	Standard-stock symbol	Overall length L	ℓ_0	ℓ_1	ℓ_2	d_3	d_4	kg/m
	18	183 93 93 153	98	11	17.5	11	M6	A	730	500	70	160	36	30.3	5.03
									930	700	70	160	36	30.3	5.03
									1430	1200	70	160	36	30.3	5.03
									1830	1600	70	160	36	30.3	5.03
								B	930	500	100	330	36	30.3	5.03
									1100	700	100	300	36	30.3	5.03
									1830	1200	100	530	36	30.3	5.03
	18	175 85 85 145	102	11	17.5	11	M6	A	1230	1000	70	160	40	30.3	6.59
									1730	1500	70	160	40	30.3	6.59
									2030	1800	70	160	40	30.3	6.59
									2230	2000	70	160	40	30.3	6.59

Unfinished Shaft Ends

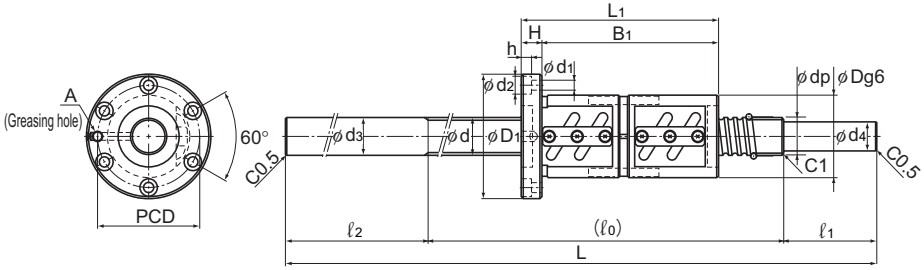

Model BNFN

Model No.	Ball screw specifications								Nut			
	Screw shaft outer diameter	Lead	Ball center-to-center diameter	Thread minor diameter	No. of loaded circuits	Basic load rating		Applied preload	Outer diameter	Flange diameter	Overall length	Mass
						Ca	C_0a					
	d	Ph	dp	dc	Rows x turns	kN	kN	N	D	D_1	L_1	kg
BNFN 4012-5 BNF 4012-5 BIF 4012-5 BIF 4012-10	40	12	42	34.1	2×2.5 2×2.5 1×2.5 2×2.5	61.6 61.6 33.9 61.6	158.8 158.8 79.2 158.8	3090 — 1720 3090	84	126	227 119 119 191	6.3 4.2 4.2 6.24
BNFN 5010-5 BNF 5010-5 BIF 5010-5 BIF 5010-10	50	10	51.75	44.4	2×2.5 2×2.5 1×2.5 2×2.5	58.2 58.2 32 58.2	176.4 176.4 88.2 176.4	2890 — 1620 2890	93	135	193 103 103 163	7.2 4.4 4.4 6.35

Model number coding

BNFN4012-5 RR G0 +1230L C5 A

- BNFN4012-5: Model number
- RR: Seal symbol (*1)
- G0: Symbol for clearance in the axial direction (*2)
- +1230L: Overall screw shaft length (in mm)
- C5: Accuracy symbol (*3)
- A: Symbol for standard-stock type (symbol A or B)

(*1) See A15-166. (*2) See A15-25. (*3) See A15-18.

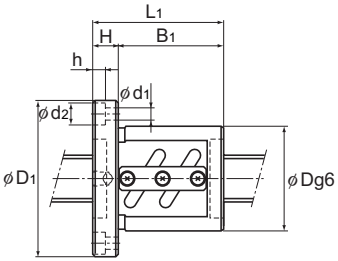

Model BNF

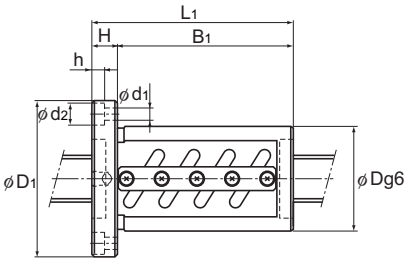

Model BIF

Unit: mm

Dimensions								Screw shaft dimensions							Shaft mass
	H	B_1	PCD	d_1	d_2	h	Greasing hole A	Standard-stock symbol	Overall length L	ℓ_0	ℓ_1	ℓ_2	d_3	d_4	kg/m
	18	209 101 101 173	104	11	17.5	11	M6	A	1230	1000	70	160	40	30.3	6.39
									1730	1500	70	160	40	30.3	6.39
									2030	1800	70	160	40	30.3	6.39
									2230	2000	70	160	40	30.3	6.39
								B	1730	1200	100	430	40	33.8	6.39
									2030	1200	100	730	40	33.8	6.39
	18	175 85 85 145	113	11	17.5	11	PT 1/8	A	1300	1000	100	200	50	40.3	11.36
									1800	1500	100	200	50	40.3	11.36
									2300	2000	100	200	50	40.3	11.36
									2800	2500	100	200	50	40.3	11.36

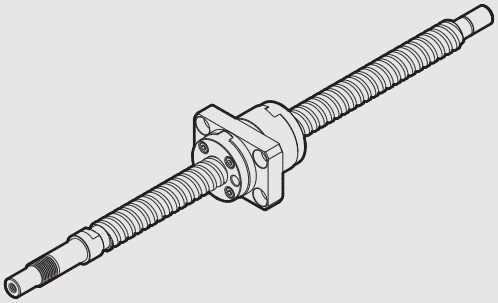

Standard-Stock Precision Ball Screw Finished Shaft Ends

Model BNK

Ball Screw

B Product Specifications

Dimensional Drawing, Dimensional Table

BNK0401-3 Shaft Diameter: 4; Lead: 1 ... B15-54
BNK0501-3 Shaft Diameter: 5; Lead: 1 ... B15-56
BNK0601-3 Shaft Diameter: 6; Lead: 1 ... B15-58
BNK0801-3 Shaft Diameter: 8; Lead: 1 ... B15-60
BNK0802-3 Shaft Diameter: 8; Lead: 2 ... B15-62
BNK0810-3 Shaft Diameter: 8; Lead: 10.. B15-64
BNK1002-3 Shaft Diameter: 10; Lead: 2.. B15-66
BNK1004-2.5 Shaft Diameter: 10; Lead: 4.. B15-68
BNK1010-1.5 Shaft Diameter: 10; Lead: 10 B15-70
BNK1202-3 Shaft Diameter: 12; Lead: 2.. B15-72
BNK1205-2.5 Shaft Diameter: 12; Lead: 5.. B15-74
BNK1208-2.6 Shaft Diameter: 12; Lead: 8.. B15-76
BNK1402-3 Shaft Diameter: 14; Lead: 2.. B15-78
BNK1404-3 Shaft Diameter: 14; Lead: 4.. B15-80
BNK1408-2.5 Shaft Diameter: 14; Lead: 8.. B15-82
BNK1510-5.6 Shaft Diameter: 15; Lead: 10 B15-84
BNK1520-3 Shaft Diameter: 15; Lead: 20 B15-86
BNK1616-3.6 Shaft Diameter: 16; Lead: 16 B15-88
BNK2010-2.5 Shaft Diameter: 20; Lead: 10 B15-90
BNK2020-3.6 Shaft Diameter: 20; Lead: 20 B15-92
BNK2520-3.6 Shaft Diameter: 25; Lead: 20 B15-94

Options

Dimensions of the Ball Screw Nut Attached with Wiper Ring W and QZ Lubricator B15-228

A Technical Descriptions of the Products (Separate)

Technical Descriptions

Features A15-109
Types and Features A15-109
Table of Ball Screw Types with Finished Shaft Ends and the Corresponding Support Units and Nut Brackets A15-110

* Please see the separate "A Technical Descriptions of the Products".

BNK0401-3 Shaft diameter: 4; lead: 1

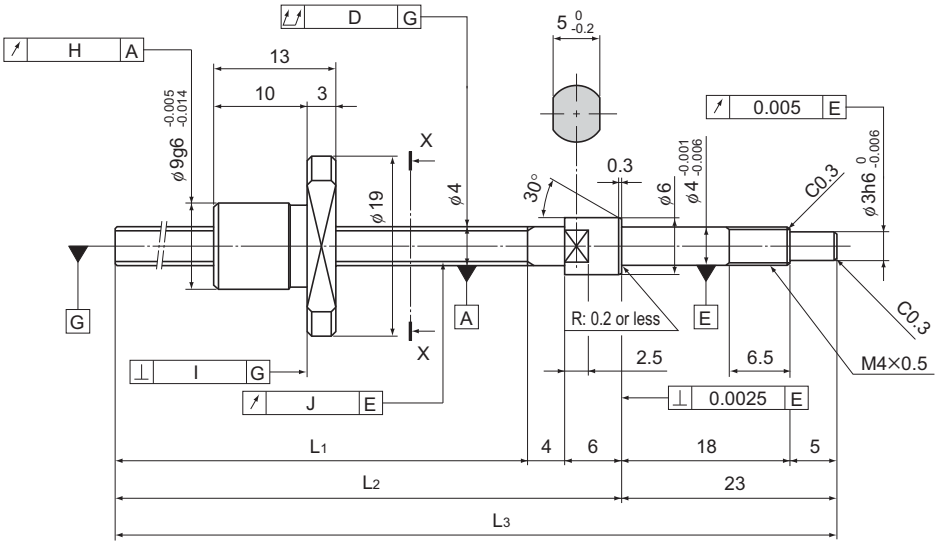

Model No.	Stroke	Screw shaft length		
		L_1	L_2	L_3
BNK 0401-3G0+77LC3Y	20	44	54	77
BNK 0401-3G0+77LC5Y				
BNK 0401-3G2+77LC7Y				
BNK 0401-3G0+97LC3Y	40	64	74	97
BNK 0401-3G0+97LC5Y				
BNK 0401-3G2+97LC7Y				
BNK 0401-3G0+127LC3Y	70	94	104	127
BNK 0401-3G0+127LC5Y				
BNK 0401-3G2+127LC7Y				

Note) A stainless steel type is also available for model BNK0401. When placing an order, add symbol "M" to the end of the model number.

(Example) BNK0401-3G0+77LC3Y M
└ Symbol for stainless steel type

For accuracy grades C3 and C5, clearance GT is also available as standard.

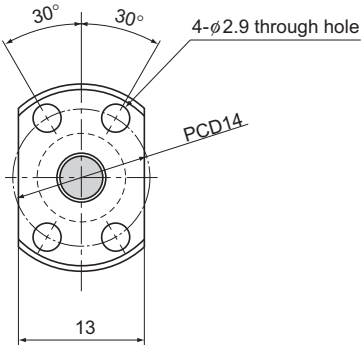

X-X arrow view

Ball Screw Specifications			
Lead (mm)	1		
BCD(mm)	4.15		
Thread minor diameter (mm)	3.4		
Threading direction, No. of threaded grooves	Rightward, 1		
No. of circuits	1 turn × 3 rows		
Clearance symbol	G0	GT	G2
Axial clearance (mm)	0	0.005 or less	0.02 or less
Basic dynamic load rating Ca (kN)	0.29	0.29	0.29
Basic static load rating C_0a(kN)	0.42	0.42	0.42
Preload torque (N-m)	to 9.8×10^{-3}	—	—
Spacer ball	None	None	None
Rigidity value(N/μm)	35		
Circulation method	Deflector		

Unit: mm

	Runout of the screw shaft axis D	Runout of the nut circumference H	Flange perpendicularity I	Runout of the thread groove surface J	Lead angle accuracy: Representative travel distance error	Lead angle accuracy: Fluctuation	Nut mass kg	Shaft mass kg/m
	0.015	0.009	0.008	0.008	±0.008	0.008	0.01	0.07
	0.025	0.012	0.01	0.01	±0.018	0.018	0.01	0.07
	0.035	0.02	0.014	0.014	Travel distance: ±0.05/300		0.01	0.07
	0.02	0.009	0.008	0.008	±0.008	0.008	0.01	0.07
	0.025	0.012	0.01	0.01	±0.018	0.018	0.01	0.07
	0.035	0.02	0.014	0.014	Travel distance: ±0.05/300		0.01	0.07
	0.025	0.009	0.008	0.008	±0.008	0.008	0.01	0.07
	0.035	0.012	0.01	0.01	±0.018	0.018	0.01	0.07
	0.05	0.02	0.014	0.014	Travel distance: ±0.05/300		0.01	0.07

BNK0501-3 Shaft diameter: 5; lead: 1

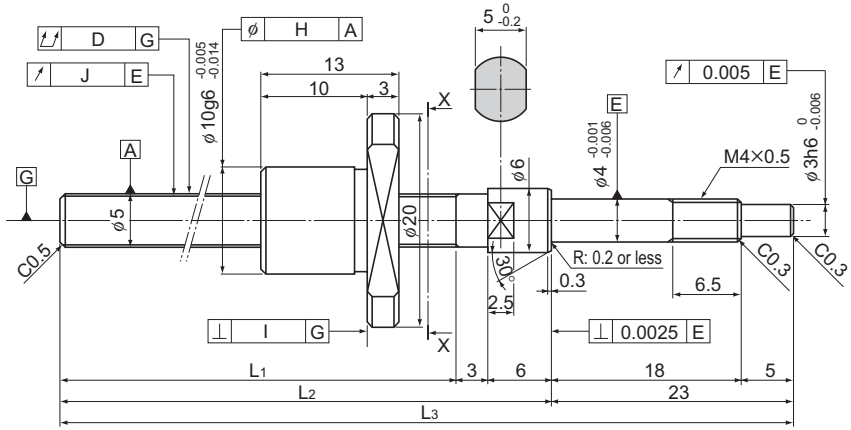

Model No.	Stroke	Screw shaft length		
		L_1	L_2	L_3
BNK 0501-3G0+77LC3Y	20	45	54	77
BNK 0501-3G0+77LC5Y				
BNK 0501-3G2+77LC7Y				
BNK 0501-3G0+97LC3Y	40	65	74	97
BNK 0501-3G0+97LC5Y				
BNK 0501-3G2+97LC7Y				
BNK 0501-3G0+127LC3Y	70	95	104	127
BNK 0501-3G0+127LC5Y				
BNK 0501-3G2+127LC7Y				

Note) A stainless steel type is also available for model BNK0501. When placing an order, add symbol "M" to the end of the model number.

(Example) BNK0501-3G0+77LC3Y M
└ Symbol for stainless steel type

For accuracy grades C3 and C5, clearance GT is also available as standard.

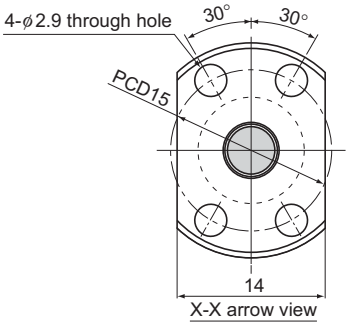

Ball Screw Specifications			
Lead (mm)	1		
BCD(mm)	5.15		
Thread minor diameter (mm)	4.4		
Threading direction, No. of threaded grooves	Rightward, 1		
No. of circuits	1 turn × 3 rows		
Clearance symbol	G0	GT	G2
Axial clearance (mm)	0	0.005 or less	0.02 or less
Basic dynamic load rating Ca (kN)	0.32	0.32	0.32
Basic static load rating C_0a(kN)	0.55	0.55	0.55
Preload torque (N-m)	to 9.8×10^{-3}	—	—
Spacer ball	None	None	None
Rigidity value(N/μm)	47		
Circulation method	Deflector		

Unit: mm

	Runout of the screw shaft axis	Runout of the nut circumference	Flange perpendicularity	Runout of the thread groove surface	Lead angle accuracy		Nut mass	Shaft mass
	D	H	I	J	Representative travel distance error	Fluctuation	kg	kg/m
	0.015	0.009	0.008	0.008	±0.008	0.008	0.012	0.11
	0.025	0.012	0.01	0.01	±0.018	0.018	0.012	0.11
	0.035	0.02	0.014	0.014	Travel distance: ±0.05/300		0.012	0.11
	0.02	0.009	0.008	0.008	±0.008	0.008	0.012	0.11
	0.025	0.012	0.01	0.01	±0.018	0.018	0.012	0.11
	0.035	0.02	0.014	0.014	Travel distance: ±0.05/300		0.012	0.11
	0.025	0.009	0.008	0.008	±0.008	0.008	0.012	0.11
	0.035	0.012	0.01	0.01	±0.018	0.018	0.012	0.11
	0.05	0.02	0.014	0.014	Travel distance: ±0.05/300		0.012	0.11

BNK0601-3 Shaft diameter: 6; lead: 1

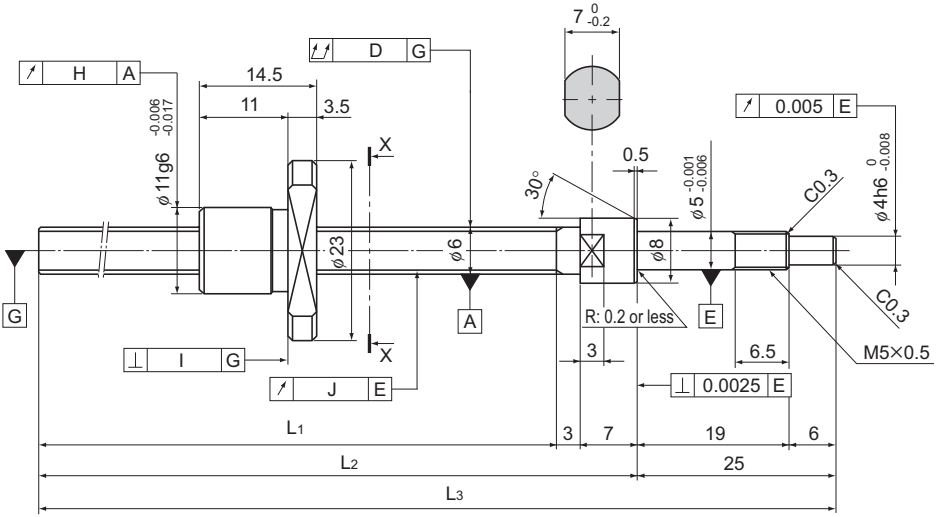

Model No.	Stroke	Screw shaft length		
		L_1	L_2	L_3
BNK 0601-3G0+100LC3Y	40	65	75	100
BNK 0601-3G0+100LC5Y				
BNK 0601-3G2+100LC7Y				
BNK 0601-3G0+130LC3Y	70	95	105	130
BNK 0601-3G0+130LC5Y				
BNK 0601-3G2+130LC7Y				
BNK 0601-3G0+160LC3Y	100	125	135	160
BNK 0601-3G0+160LC5Y				
BNK 0601-3G2+160LC7Y				

Note) A stainless steel type is also available for model BNK0601. When placing an order, add symbol "M" to the end of the model number.

(Example) BNK0601-3G0+100LC3Y M
└──Symbol for stainless steel type

For accuracy grades C3 and C5, clearance GT is also available as standard.

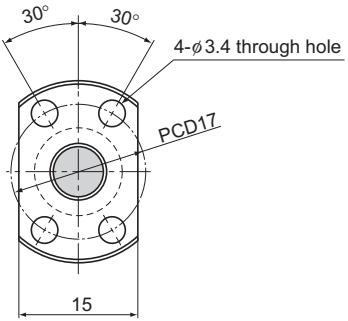

X-X arrow view

Ball Screw Specifications			
Lead (mm)	1		
BCD(mm)	6.2		
Thread minor diameter (mm)	5.3		
Threading direction, No. of threaded grooves	Rightward, 1		
No. of circuits	1 turn × 3 rows		
Clearance symbol	G0	GT	G2
Axial clearance (mm)	0	0.005 or less	0.02 or less
Basic dynamic load rating Ca (kN)	0.54	0.54	0.54
Basic static load rating C_0a(kN)	0.94	0.94	0.94
Preload torque (N-m)	to 1.3×10^{-2}	—	—
Spacer ball	None	None	None
Rigidity value(N/μm)	60		
Circulation method	Deflector		

Unit: mm

	Runout of the screw shaft axis D	Runout of the nut circumference H	Flange perpendicularity I	Runout of the thread groove surface J	Lead angle accuracy: Representative travel distance error	Lead angle accuracy: Fluctuation	Nut mass kg	Shaft mass kg/m
	0.015	0.009	0.008	0.008	±0.008	0.008	0.017	0.14
	0.025	0.012	0.01	0.01	±0.018	0.018	0.017	0.14
	0.035	0.02	0.014	0.014	Travel distance: ±0.05/300		0.017	0.14
	0.02	0.009	0.008	0.008	±0.008	0.008	0.017	0.14
	0.035	0.012	0.01	0.01	±0.018	0.018	0.017	0.14
	0.05	0.02	0.014	0.014	Travel distance: ±0.05/300		0.017	0.14
	0.025	0.009	0.008	0.008	±0.01	0.008	0.017	0.14
	0.035	0.012	0.01	0.01	±0.02	0.018	0.017	0.14
	0.05	0.02	0.014	0.014	Travel distance: ±0.05/300		0.017	0.14

BNK0801-3 Shaft diameter: 8; lead: 1

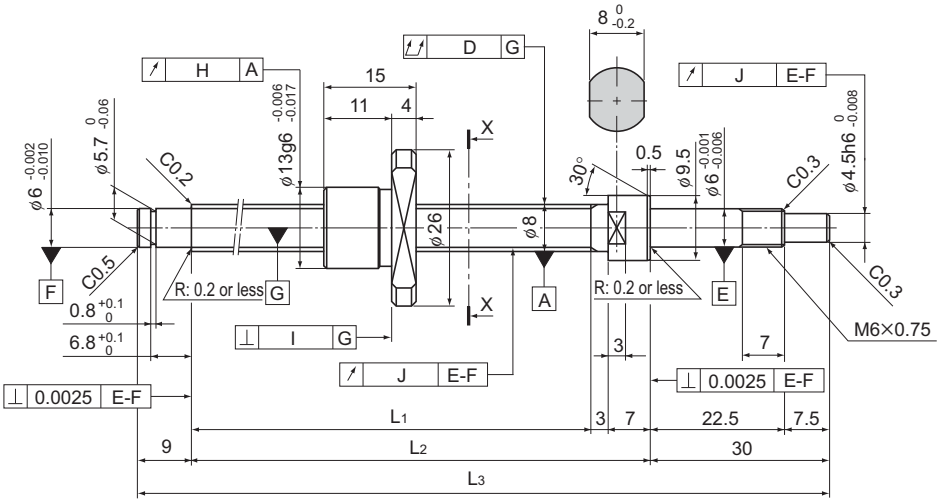

Model No.	Stroke	Screw shaft length		
		L_1	L_2	L_3
BNK 0801-3G0+115LC3Y	40	66	76	115
BNK 0801-3G0+115LC5Y				
BNK 0801-3G2+115LC7Y				
BNK 0801-3G0+145LC3Y	70	96	106	145
BNK 0801-3G0+145LC5Y				
BNK 0801-3G2+145LC7Y				
BNK 0801-3G0+175LC3Y	100	126	136	175
BNK 0801-3G0+175LC5Y				
BNK 0801-3G2+175LC7Y				
BNK 0801-3G0+225LC3Y	150	176	186	225
BNK 0801-3G0+225LC5Y				
BNK 0801-3G2+225LC7Y				

Note) A stainless steel type is also available for model BNK0801. When placing an order, add symbol "M" to the end of the model number.

(Example) BNK0801-3G0+115LC3Y M
└──Symbol for stainless steel type

For accuracy grades C3 and C5, clearance GT is also available as standard.

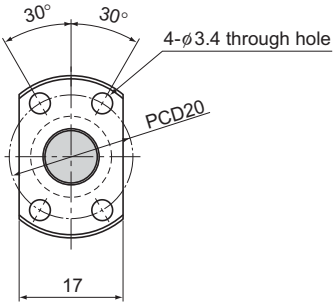

X-X arrow view

Ball Screw Specifications			
Lead (mm)	1		
BCD(mm)	8.2		
Thread minor diameter (mm)	7.3		
Threading direction, No. of threaded grooves	Rightward, 1		
No. of circuits	1 turn × 3 rows		
Clearance symbol	G0	GT	G2
Axial clearance (mm)	0	0.005 or less	0.02 or less
Basic dynamic load rating Ca (kN)	0.64	0.64	0.64
Basic static load rating C_0a(kN)	1.4	1.4	1.4
Preload torque (N-m)	to 1.8×10^{-2}	—	—
Spacer ball	None	None	None
Rigidity value(N/μm)	80		
Circulation method	Deflector		

Unit: mm

	Runout of the screw shaft axis D	Runout of the nut circumference H	Flange perpendicularity I	Runout of the thread groove surface J	Lead angle accuracy: Representative travel distance error	Lead angle accuracy: Fluctuation	Nut mass kg	Shaft mass kg/m
	0.025	0.009	0.008	0.008	±0.008	0.008	0.024	0.29
	0.025	0.012	0.01	0.01	±0.018	0.018	0.024	0.29
	0.035	0.02	0.014	0.014	Travel distance: ±0.05/300		0.024	0.29
	0.03	0.009	0.008	0.008	±0.008	0.008	0.024	0.29
	0.035	0.012	0.01	0.01	±0.018	0.018	0.024	0.29
	0.05	0.02	0.014	0.014	Travel distance: ±0.05/300		0.024	0.29
	0.03	0.009	0.008	0.008	±0.01	0.008	0.024	0.29
	0.035	0.012	0.01	0.01	±0.02	0.018	0.024	0.29
	0.05	0.02	0.014	0.014	Travel distance: ±0.05/300		0.024	0.29
	0.035	0.009	0.008	0.008	±0.01	0.008	0.024	0.29
	0.05	0.012	0.01	0.01	±0.02	0.018	0.024	0.29
	0.065	0.02	0.014	0.014	Travel distance: ±0.05/300		0.024	0.29

BNK0802-3 Shaft diameter: 8; lead: 2

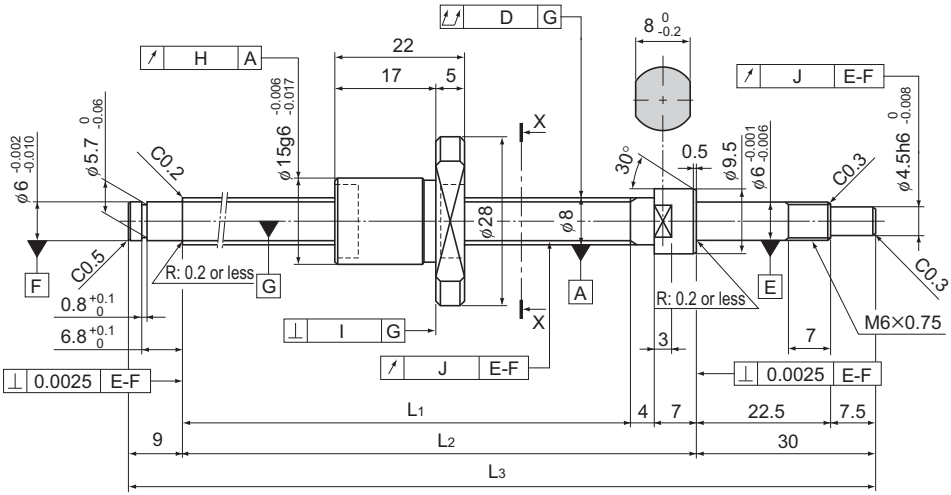

Model No.	Stroke	Screw shaft length		
		L_1	L_2	L_3
BNK 0802-3RRG0+125LC3Y	40	75	86	125
BNK 0802-3RRG0+125LC5Y				
BNK 0802-3RRG2+125LC7Y				
BNK 0802-3RRG0+155LC3Y	70	105	116	155
BNK 0802-3RRG0+155LC5Y				
BNK 0802-3RRG2+155LC7Y				
BNK 0802-3RRG0+185LC3Y	100	135	146	185
BNK 0802-3RRG0+185LC5Y				
BNK 0802-3RRG2+185LC7Y				
BNK 0802-3RRG0+235LC3Y	150	185	196	235
BNK 0802-3RRG0+235LC5Y				
BNK 0802-3RRG2+235LC7Y				

Note) A stainless steel type is also available for model BNK0802. When placing an order, add symbol "M" to the end of the model number.

(Example) BNK0802-3RRG0+125LC3Y M
└ Symbol for stainless steel type

For accuracy grades C3 and C5, clearance GT is also available as standard.

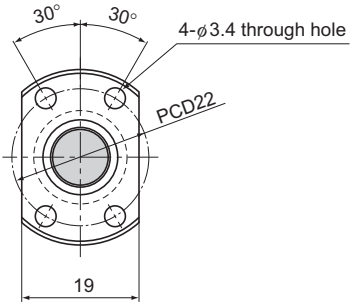

X-X arrow view

Ball Screw Specifications			
Lead (mm)	2		
BCD(mm)	8.3		
Thread minor diameter (mm)	7		
Threading direction, No. of threaded grooves	Rightward, 1		
No. of circuits	1 turn × 3 rows		
Clearance symbol	G0	GT	G2
Axial clearance (mm)	0	0.005 or less	0.02 or less
Basic dynamic load rating Ca (kN)	1.4	1.4	1.4
Basic static load rating C_0a(kN)	2.3	2.3	2.3
Preload torque (N-m)	to 2×10^{-2}	—	—
Spacer ball	None	None	None
Rigidity value(N/μm)	100		
Circulation method	Deflector		

Unit: mm

	Runout of the screw shaft axis D	Runout of the nut circumference H	Flange perpendicularity I	Runout of the thread groove surface J	Lead angle accuracy: Representative travel distance error	Lead angle accuracy: Fluctuation	Nut mass kg	Shaft mass kg/m
	0.025	0.009	0.008	0.008	±0.008	0.008	0.034	0.27
	0.025	0.012	0.01	0.01	±0.018	0.018	0.034	0.27
	0.035	0.02	0.014	0.014	Travel distance: ±0.05/300		0.034	0.27
	0.03	0.009	0.008	0.008	±0.01	0.008	0.034	0.27
	0.035	0.012	0.01	0.01	±0.02	0.018	0.034	0.27
	0.05	0.02	0.014	0.014	Travel distance: ±0.05/300		0.034	0.27
	0.03	0.009	0.008	0.008	±0.01	0.008	0.034	0.27
	0.035	0.012	0.01	0.01	±0.02	0.018	0.034	0.27
	0.05	0.02	0.014	0.014	Travel distance: ±0.05/300		0.034	0.27
	0.035	0.009	0.008	0.008	±0.01	0.008	0.034	0.27
	0.05	0.012	0.01	0.01	±0.02	0.018	0.034	0.27
	0.065	0.02	0.014	0.014	Travel distance: ±0.05/300		0.034	0.27

Description of Each Option⇒A15-165 Dimensions⇒B15-227

BNK0810-3 Shaft diameter: 8; lead: 10

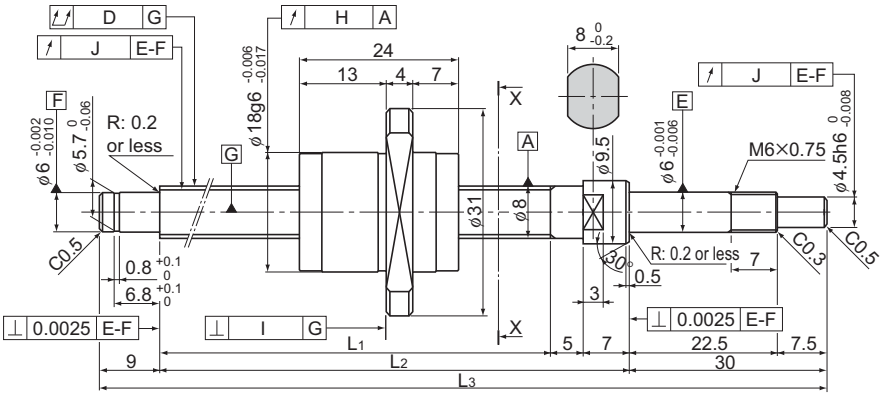

Model No.	Stroke	Screw shaft length		
		L_1	L_2	L_3
BNK 0810-3GT+205LC5Y	100	154	166	205
BNK 0810-3G2+205LC7Y				
BNK 0810-3GT+255LC5Y	150	204	216	255
BNK 0810-3G2+255LC7Y				
BNK 0810-3GT+305LC5Y	200	254	266	305
BNK 0810-3G2+305LC7Y				
BNK 0810-3GT+355LC5Y	250	304	316	355
BNK 0810-3G2+355LC7Y				
BNK 0810-3GT+405LC5Y	300	354	366	405
BNK 0810-3G2+405LC7Y				

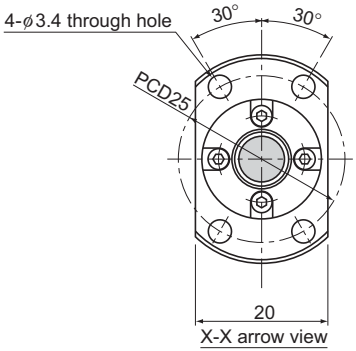

Ball Screw Specifications		
Lead (mm)	10	
BCD(mm)	8.4	
Thread minor diameter (mm)	6.7	
Threading direction, No. of threaded grooves	Rightward, 2	
No. of circuits	1.5 turns × 2 rows	
Clearance symbol	GT	G2
Axial clearance (mm)	0.005 or less	0.02 or less
Basic dynamic load rating Ca (kN)	2.16	2.16
Basic static load rating C_0a(kN)	3.82	3.82
Preload torque (N-m)	—	—
Spacer ball	None	None
Rigidity value(N/μm)	100	
Circulation method	End cap	

Unit: mm

	Runout of the screw shaft axis D	Runout of the nut circumference H	Flange perpendicularity I	Runout of the thread groove surface J	Lead angle accuracy: Representative travel distance error	Lead angle accuracy: Fluctuation	Nut mass kg	Shaft mass kg/m
	0.05	0.012	0.01	0.01	±0.02	0.018	0.049	0.30
	0.065	0.02	0.014	0.014	Travel distance: ±0.05/300		0.049	0.30
	0.05	0.012	0.01	0.01	±0.023	0.018	0.049	0.30
	0.065	0.02	0.014	0.014	Travel distance: ±0.05/300		0.049	0.30
	0.05	0.012	0.01	0.01	±0.023	0.018	0.049	0.30
	0.065	0.02	0.014	0.014	Travel distance: ±0.05/300		0.049	0.30
	0.06	0.012	0.01	0.01	±0.023	0.018	0.049	0.30
	0.075	0.02	0.014	0.014	Travel distance: ±0.05/300		0.049	0.30
	0.07	0.012	0.01	0.01	±0.025	0.018	0.049	0.30
	0.09	0.02	0.014	0.014	Travel distance: ±0.05/300		0.049	0.30

BNK1002-3 Shaft diameter: 10; lead: 2

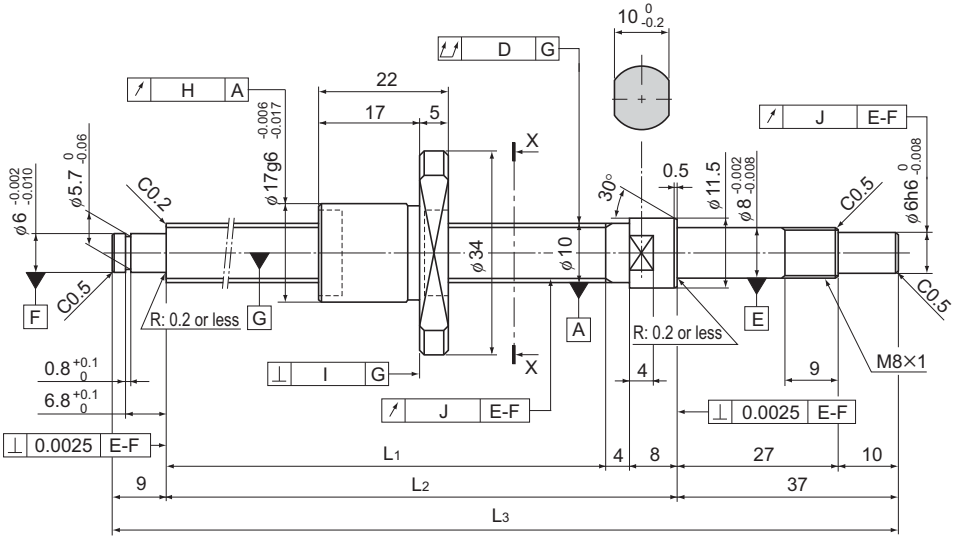

Model No.	Stroke	Screw shaft length		
		L_1	L_2	L_3
BNK 1002-3RRG0+143LC3Y	50	85	97	143
BNK 1002-3RRG0+143LC5Y				
BNK 1002-3RRG2+143LC7Y				
BNK 1002-3RRG0+193LC3Y	100	135	147	193
BNK 1002-3RRG0+193LC5Y				
BNK 1002-3RRG2+193LC7Y				
BNK 1002-3RRG0+243LC3Y	150	185	197	243
BNK 1002-3RRG0+243LC5Y				
BNK 1002-3RRG2+243LC7Y				
BNK 1002-3RRG0+293LC3Y	200	235	247	293
BNK 1002-3RRG0+293LC5Y				
BNK 1002-3RRG2+293LC7Y				

Note) A stainless steel type is also available for model BNK1002. When placing an order, add symbol "M" to the end of the model number.

(Example) BNK1002-3RRG0+143LC3Y M
└ Symbol for stainless steel type

For accuracy grades C3 and C5, clearance GT is also available as standard.

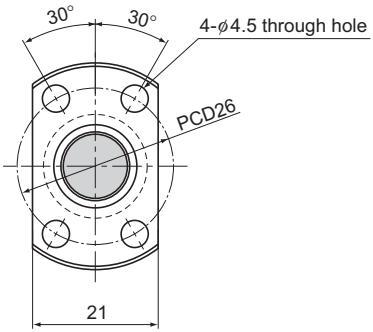

X-X arrow view

Ball Screw Specifications			
Lead (mm)	2		
BCD(mm)	10.3		
Thread minor diameter (mm)	9		
Threading direction, No. of threaded grooves	Rightward, 1		
No. of circuits	1 turn × 3 rows		
Clearance symbol	G0	GT	G2
Axial clearance (mm)	0	0.005 or less	0.02 or less
Basic dynamic load rating Ca (kN)	1.5	1.5	1.5
Basic static load rating C_0a(kN)	2.9	2.9	2.9
Preload torque (N-m)	to 2.5×10^{-2}	—	—
Spacer ball	None	None	None
Rigidity value(N/μm)	100		
Circulation method	Deflector		

Unit: mm

	Runout of the screw shaft axis D	Runout of the nut circumference H	Flange perpendicularity I	Runout of the thread groove surface J	Lead angle accuracy: Representative travel distance error	Lead angle accuracy: Fluctuation	Nut mass kg	Shaft mass kg/m
	0.02	0.009	0.008	0.007	±0.008	0.008	0.045	0.47
	0.035	0.012	0.01	0.011	±0.018	0.018	0.045	0.47
	0.04	0.02	0.014	0.014	Travel distance: ±0.05/300		0.045	0.47
	0.03	0.009	0.008	0.007	±0.01	0.008	0.045	0.47
	0.035	0.012	0.01	0.011	±0.02	0.018	0.045	0.47
	0.04	0.02	0.014	0.014	Travel distance: ±0.05/300		0.045	0.47
	0.03	0.009	0.008	0.007	±0.01	0.008	0.045	0.47
	0.04	0.012	0.01	0.011	±0.02	0.018	0.045	0.47
	0.055	0.02	0.014	0.014	Travel distance: ±0.05/300		0.045	0.47
	0.03	0.009	0.008	0.007	±0.012	0.008	0.045	0.47
	0.04	0.012	0.01	0.011	±0.023	0.018	0.045	0.47
	0.055	0.02	0.014	0.014	Travel distance: ±0.05/300		0.045	0.47

BNK1004-2.5 Shaft diameter: 10; lead: 4

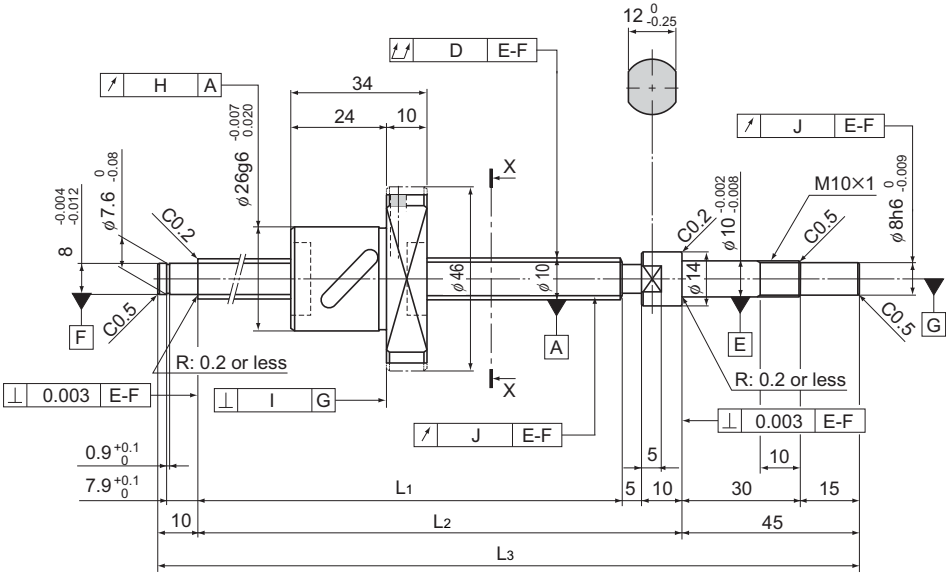

Model No.	Stroke	Screw shaft length		
		L_1	L_2	L_3
BNK 1004-2.5RRG0+180LC3Y	50	110	125	180
BNK 1004-2.5RRG0+180LC5Y				
BNK 1004-2.5RRG2+180LC7Y				
BNK 1004-2.5RRG0+230LC3Y	100	160	175	230
BNK 1004-2.5RRG0+230LC5Y				
BNK 1004-2.5RRG2+230LC7Y				
BNK 1004-2.5RRG0+280LC3Y	150	210	225	280
BNK 1004-2.5RRG0+280LC5Y				
BNK 1004-2.5RRG2+280LC7Y				
BNK 1004-2.5RRG0+330LC3Y	200	260	275	330
BNK 1004-2.5RRG0+330LC5Y				
BNK 1004-2.5RRG2+330LC7Y				
BNK 1004-2.5RRG0+380LC3Y	250	310	325	380
BNK 1004-2.5RRG0+380LC5Y				
BNK 1004-2.5RRG2+380LC7Y				

Note) For accuracy grades C3 and C5, clearance GT is also available as standard.

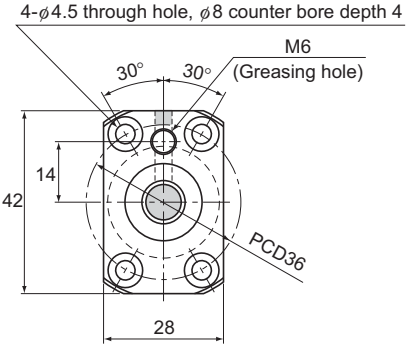

X-X arrow view

Ball Screw Specifications			
Lead (mm)	4		
BCD(mm)	10.5		
Thread minor diameter (mm)	7.8		
Threading direction, No. of threaded grooves	Rightward, 1		
No. of circuits	2.5 turns × 1 row		
Clearance symbol	G0	GT	G2
Axial clearance (mm)	0	0.005 or less	0.02 or less
Basic dynamic load rating Ca (kN)	2.1	3.4	3.4
Basic static load rating C_0a(kN)	2.7	5.4	5.4
Preload torque (N-m)	9.8×10^{-3} to 4.9×10^{-2}	—	—
Spacer ball	1 : 1	None	None
Rigidity value(N/μm)	50	100	
Circulation method	Return pipe		

Unit: mm

	Runout of the screw shaft axis D	Runout of the nut circumference H	Flange perpendicularity I	Runout of the thread groove surface J	Lead angle accuracy: Representative travel distance error	Lead angle accuracy: Fluctuation	Nut mass kg	Shaft mass kg/m
	0.02	0.009	0.008	0.008	±0.01	0.008	0.15	0.32
	0.035	0.012	0.01	0.011	±0.02	0.018	0.15	0.32
	0.04	0.02	0.014	0.014	Travel distance: ±0.05/300		0.15	0.32
	0.03	0.009	0.008	0.008	±0.01	0.008	0.15	0.32
	0.04	0.012	0.01	0.011	±0.02	0.018	0.15	0.32
	0.055	0.02	0.014	0.014	Travel distance: ±0.05/300		0.15	0.32
	0.03	0.009	0.008	0.008	±0.012	0.008	0.15	0.32
	0.04	0.012	0.01	0.011	±0.023	0.018	0.15	0.32
	0.055	0.02	0.014	0.014	Travel distance: ±0.05/300		0.15	0.32
	0.04	0.009	0.008	0.008	±0.012	0.008	0.15	0.32
	0.05	0.012	0.01	0.011	±0.023	0.018	0.15	0.32
	0.065	0.02	0.014	0.014	Travel distance: ±0.05/300		0.15	0.32
	0.04	0.009	0.008	0.008	±0.012	0.008	0.15	0.32
	0.05	0.012	0.01	0.011	±0.023	0.018	0.15	0.32
	0.065	0.02	0.014	0.014	Travel distance: ±0.05/300		0.15	0.32

BNK1010-1.5 Shaft diameter: 10; lead: 10

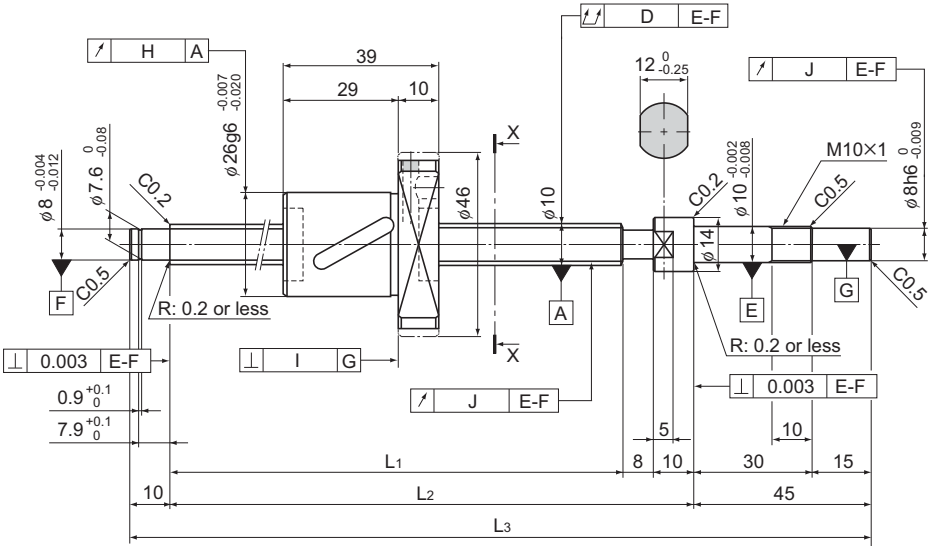

Model No.	Stroke	Screw shaft length		
		L_1	L_2	L_3
BNK 1010-1.5RRG0+240LC5Y	100	167	185	240
BNK 1010-1.5RRG2+240LC7Y				
BNK 1010-1.5RRG0+290LC5Y	150	217	235	290
BNK 1010-1.5RRG2+290LC7Y				
BNK 1010-1.5RRG0+340LC5Y	200	267	285	340
BNK 1010-1.5RRG2+340LC7Y				
BNK 1010-1.5RRG0+390LC5Y	250	317	335	390
BNK 1010-1.5RRG2+390LC7Y				
BNK 1010-1.5RRG0+440LC5Y	300	367	385	440
BNK 1010-1.5RRG2+440LC7Y				

Note) For accuracy grade C5, clearance GT is also standardized.

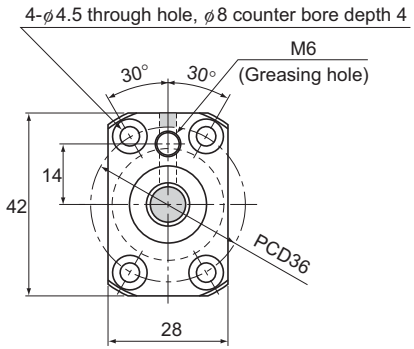

X-X arrow view

Ball Screw Specifications			
Lead (mm)	10		
BCD(mm)	10.5		
Thread minor diameter (mm)	7.8		
Threading direction, No. of threaded grooves	Rightward, 1		
No. of circuits	1.5 turns × 1 row		
Clearance symbol	G0	GT	G2
Axial clearance (mm)	0	0.005 or less	0.02 or less
Basic dynamic load rating Ca (kN)	1.3	2.1	2.1
Basic static load rating C_0a(kN)	1.6	3.1	3.1
Preload torque (N-m)	9.8×10^{-3} to 4.9×10^{-2}	—	—
Spacer ball	1 : 1	None	None
Rigidity value(N/μm)	70	140	
Circulation method	Return pipe		

Unit: mm

	Runout of the screw shaft axis D	Runout of the nut circumference H	Flange perpendicularity I	Runout of the thread groove surface J	Lead angle accuracy: Representative travel distance error	Lead angle accuracy: Fluctuation	Nut mass kg	Shaft mass kg/m
	0.04	0.012	0.01	0.011	±0.02	0.018	0.17	0.5
	0.055	0.02	0.014	0.014	Travel distance: ±0.05/300		0.17	0.5
	0.04	0.012	0.01	0.011	±0.023	0.018	0.17	0.5
	0.055	0.02	0.014	0.014	Travel distance: ±0.05/300		0.17	0.5
	0.05	0.012	0.01	0.011	±0.023	0.018	0.17	0.5
	0.065	0.02	0.014	0.014	Travel distance: ±0.05/300		0.17	0.5
	0.05	0.012	0.01	0.011	±0.025	0.02	0.17	0.5
	0.065	0.02	0.014	0.014	Travel distance: ±0.05/300		0.17	0.5
	0.065	0.012	0.01	0.011	±0.025	0.02	0.17	0.5
	0.08	0.02	0.014	0.014	Travel distance: ±0.05/300		0.17	0.5

BNK1202-3 Shaft diameter: 12; lead: 2

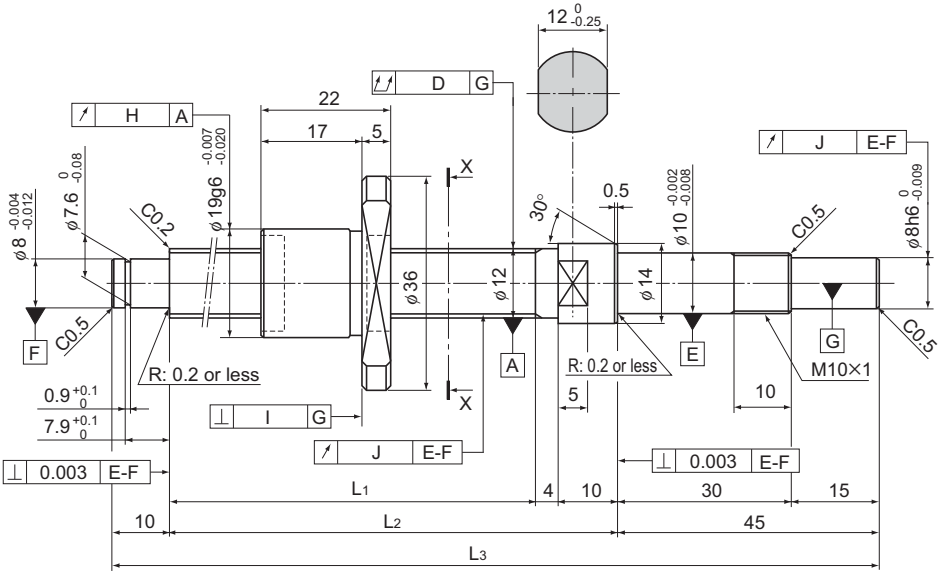

Model No.	Stroke	Screw shaft length		
		L_1	L_2	L_3
BNK 1202-3RRG0+154LC3Y	50	85	99	154
BNK 1202-3RRG0+154LC5Y				
BNK 1202-3RRG2+154LC7Y				
BNK 1202-3RRG0+204LC3Y	100	135	149	204
BNK 1202-3RRG0+204LC5Y				
BNK 1202-3RRG2+204LC7Y				
BNK 1202-3RRG0+254LC3Y	150	185	199	254
BNK 1202-3RRG0+254LC5Y				
BNK 1202-3RRG2+254LC7Y				
BNK 1202-3RRG0+304LC3Y	200	235	249	304
BNK 1202-3RRG0+304LC5Y				
BNK 1202-3RRG2+304LC7Y				
BNK 1202-3RRG0+354LC3Y	250	285	299	354
BNK 1202-3RRG0+354LC5Y				
BNK 1202-3RRG2+354LC7Y				

Note) A stainless steel type is also available for model BNK1202. When placing an order, add symbol "M" to the end of the model number.

(Example) BNK1202-3RRG0+154LC3Y M
Symbol for stainless steel type

For accuracy grades C3 and C5, clearance GT is also available as standard.

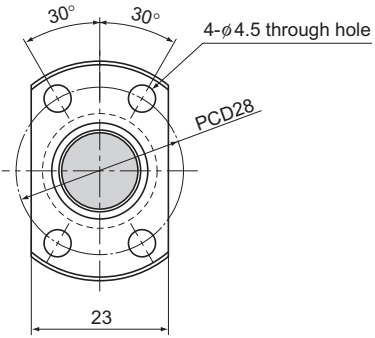

X-X arrow view

Ball Screw Specifications			
Lead (mm)	2		
BCD(mm)	12.3		
Thread minor diameter (mm)	11		
Threading direction, No. of threaded grooves	Rightward, 1		
No. of circuits	1 turn × 3 rows		
Clearance symbol	G0	GT	G2
Axial clearance (mm)	0	0.005 or less	0.02 or less
Basic dynamic load rating Ca (kN)	1.7	1.7	1.7
Basic static load rating C_0a(kN)	3.6	3.6	3.6
Preload torque (N-m)	9.8×10^{-3} to 3.4×10^{-2}	—	—
Spacer ball	None	None	None
Rigidity value(N/μm)	120		
Circulation method	Deflector		

Unit: mm

	Runout of the screw shaft axis D	Runout of the nut circumference H	Flange perpendicularity I	Runout of the thread groove surface J	Lead angle accuracy: Representative travel distance error	Lead angle accuracy: Fluctuation	Nut mass kg	Shaft mass kg/m
	0.02	0.01	0.008	0.007	±0.008	0.008	0.05	0.71
	0.035	0.012	0.01	0.011	±0.018	0.018	0.05	0.71
	0.04	0.02	0.014	0.014	Travel distance: ±0.05/300		0.05	0.71
	0.03	0.01	0.008	0.007	±0.01	0.008	0.05	0.71
	0.04	0.012	0.01	0.011	±0.02	0.018	0.05	0.71
	0.055	0.02	0.014	0.014	Travel distance: ±0.05/300		0.05	0.71
	0.03	0.01	0.008	0.007	±0.01	0.008	0.05	0.71
	0.04	0.012	0.01	0.011	±0.02	0.018	0.05	0.71
	0.055	0.02	0.014	0.014	Travel distance: ±0.05/300		0.05	0.71
	0.04	0.01	0.008	0.007	±0.012	0.008	0.05	0.71
	0.05	0.012	0.01	0.011	±0.023	0.018	0.05	0.71
	0.055	0.02	0.014	0.014	Travel distance: ±0.05/300		0.05	0.71
	0.04	0.01	0.008	0.007	±0.012	0.008	0.05	0.71
	0.05	0.012	0.01	0.011	±0.023	0.018	0.05	0.71
	0.065	0.02	0.014	0.014	Travel distance: ±0.05/300		0.05	0.71

BNK1205-2.5 Shaft diameter: 12; lead: 5

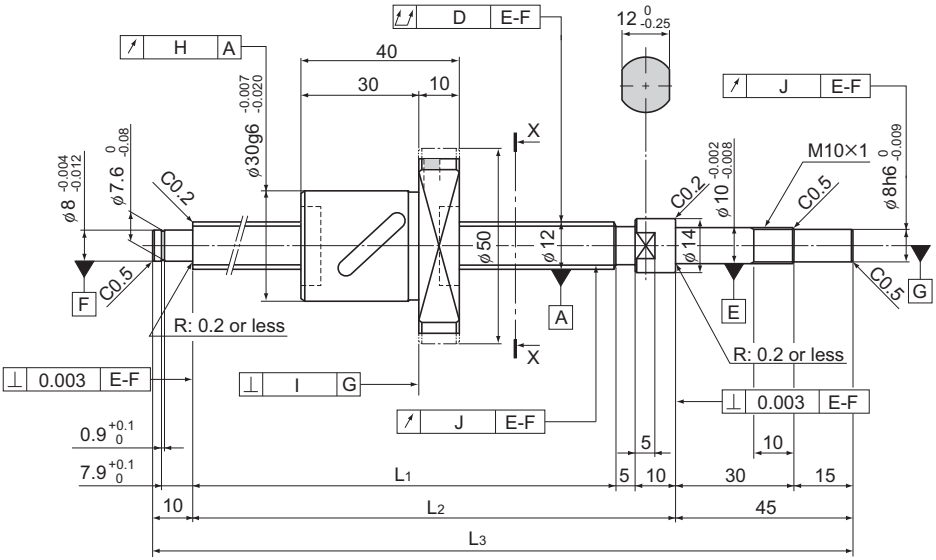

Model No.	Stroke	Screw shaft length		
		L_1	L_2	L_3
BNK 1205-2.5RRG0+180LC3Y	50	110	125	180
BNK 1205-2.5RRG0+180LC5Y				
BNK 1205-2.5RRG2+180LC7Y				
BNK 1205-2.5RRG0+230LC3Y	100	160	175	230
BNK 1205-2.5RRG0+230LC5Y				
BNK 1205-2.5RRG2+230LC7Y				
BNK 1205-2.5RRG0+280LC3Y	150	210	225	280
BNK 1205-2.5RRG0+280LC5Y				
BNK 1205-2.5RRG2+280LC7Y				
BNK 1205-2.5RRG0+330LC3Y	200	260	275	330
BNK 1205-2.5RRG0+330LC5Y				
BNK 1205-2.5RRG2+330LC7Y				
BNK 1205-2.5RRG0+380LC3Y	250	310	325	380
BNK 1205-2.5RRG0+380LC5Y				
BNK 1205-2.5RRG2+380LC7Y				

Note) For accuracy grades C3 and C5, clearance GT is also available as standard.

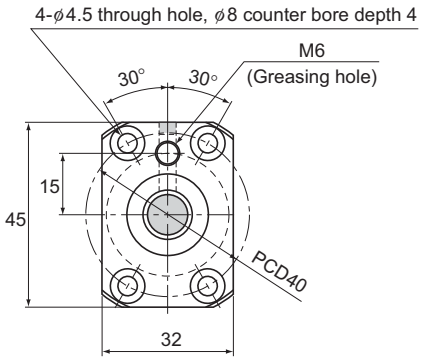

X-X arrow view

Ball Screw Specifications			
Lead (mm)	5		
BCD(mm)	12.3		
Thread minor diameter (mm)	9.6		
Threading direction, No. of threaded grooves	Rightward, 1		
No. of circuits	2.5 turns × 1 row		
Clearance symbol	G0	GT	G2
Axial clearance (mm)	0	0.005 or less	0.02 or less
Basic dynamic load rating Ca (kN)	2.3	3.7	3.7
Basic static load rating C_0a(kN)	3.2	6.4	6.4
Preload torque (N-m)	9.8×10^{-3} to 4.9×10^{-2}	—	—
Spacer ball	1 : 1	None	None
Rigidity value(N/μm)	60	120	
Circulation method	Return pipe		

Unit: mm

	Runout of the screw shaft axis	Runout of the nut circumference	Flange perpendicularity	Runout of the thread groove surface	Lead angle accuracy		Nut mass	Shaft mass
					Representative travel distance error	Fluctuation		
	D	H	I	J			kg	kg/m
	0.02	0.009	0.008	0.008	±0.01	0.008	0.22	0.61
	0.035	0.012	0.01	0.011	±0.02	0.018	0.22	0.61
	0.04	0.02	0.014	0.014	Travel distance: ±0.05/300		0.22	0.61
	0.03	0.009	0.008	0.008	±0.01	0.008	0.22	0.61
	0.04	0.012	0.01	0.011	±0.02	0.018	0.22	0.61
	0.055	0.02	0.014	0.014	Travel distance: ±0.05/300		0.22	0.61
	0.03	0.009	0.008	0.008	±0.012	0.008	0.22	0.61
	0.04	0.012	0.01	0.011	±0.023	0.018	0.22	0.61
	0.055	0.02	0.014	0.014	Travel distance: ±0.05/300		0.22	0.61
	0.04	0.009	0.008	0.008	±0.012	0.008	0.22	0.61
	0.05	0.012	0.01	0.011	±0.023	0.018	0.22	0.61
	0.065	0.02	0.014	0.014	Travel distance: ±0.05/300		0.22	0.61
	0.04	0.009	0.008	0.008	±0.012	0.008	0.22	0.61
	0.05	0.012	0.01	0.011	±0.023	0.018	0.22	0.61
	0.065	0.02	0.014	0.014	Travel distance: ±0.05/300		0.22	0.61

BNK1208-2.6 Shaft diameter: 12; lead: 8

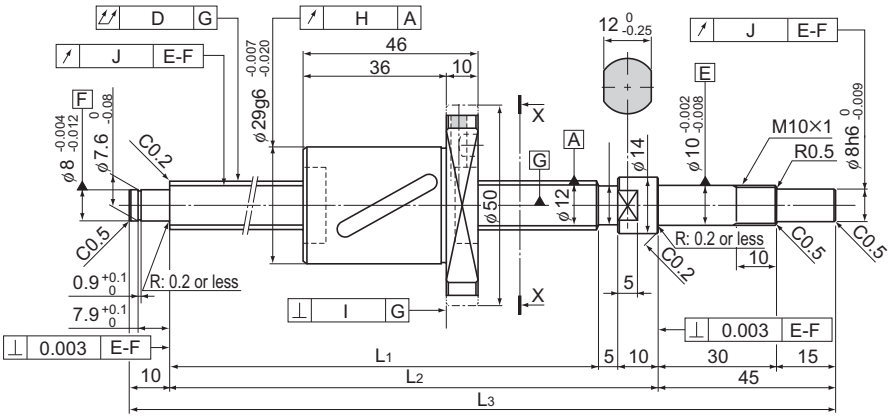

Model No.	Stroke	Screw shaft length		
		L_1	L_2	L_3
BNK 1208-2.6RRG2+180LC7Y	50	110	125	180
BNK 1208-2.6RRG2+230LC7Y	100	160	175	230
BNK 1208-2.6RRG2+280LC7Y	150	210	225	280
BNK 1208-2.6RRG2+330LC7Y	200	260	275	330
BNK 1208-2.6RRG2+380LC7Y	250	310	325	380

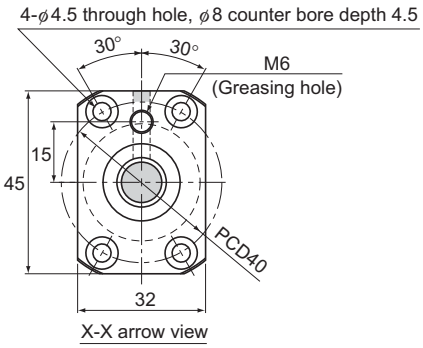

Ball Screw Specifications	
Lead (mm)	8
BCD(mm)	12.65
Thread minor diameter (mm)	9.7
Threading direction, No. of threaded grooves	Rightward, 1
No. of circuits	2.6 turns × 1 row
Clearance symbol	G2
Axial clearance (mm)	0.02 or less
Basic dynamic load rating Ca (kN)	4.7
Basic static load rating C_0a(kN)	7.5
Preload torque (N-m)	—
Spacer ball	None
Rigidity value(N/μm)	127
Circulation method	Return pipe

Unit: mm

	Runout of the screw shaft axis D	Runout of the nut circumference H	Flange perpendicularity I	Runout of the thread groove surface J	Lead angle accuracy	Nut mass kg	Shaft mass kg/m
	0.04	0.02	0.014	0.014	Travel distance: ±0.05/300	0.269	0.64
	0.055	0.02	0.014	0.014	Travel distance: ±0.05/300	0.269	0.64
	0.055	0.02	0.014	0.014	Travel distance: ±0.05/300	0.269	0.64
	0.065	0.02	0.014	0.014	Travel distance: ±0.05/300	0.269	0.64
	0.065	0.02	0.014	0.014	Travel distance: ±0.05/300	0.269	0.64

BNK1402-3 Shaft diameter: 14; lead: 2

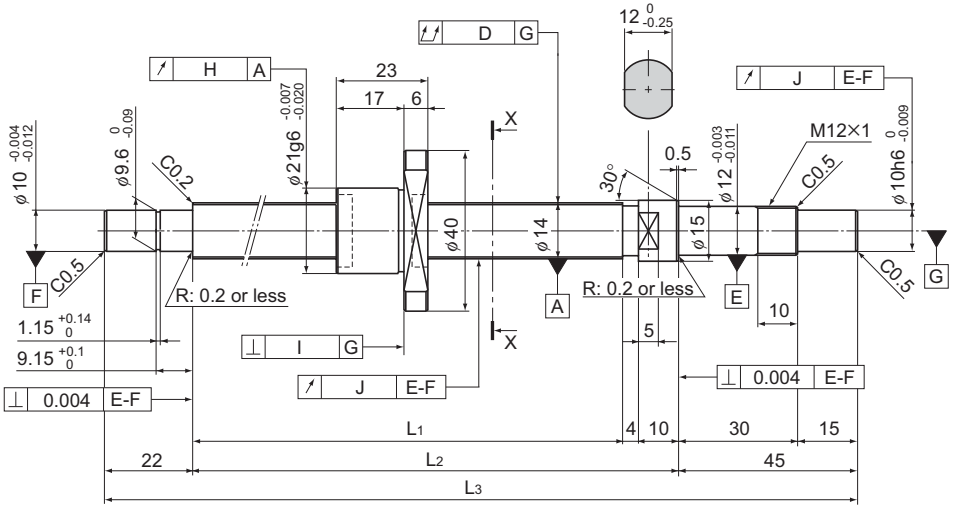

Model No.	Stroke	Screw shaft length		
		L_1	L_2	L_3
BNK 1402-3RRG0+166LC3Y	50	85	99	166
BNK 1402-3RRG0+166LC5Y				
BNK 1402-3RRG2+166LC7Y				
BNK 1402-3RRG0+216LC3Y	100	135	149	216
BNK 1402-3RRG0+216LC5Y				
BNK 1402-3RRG2+216LC7Y				
BNK 1402-3RRG0+266LC3Y	150	185	199	266
BNK 1402-3RRG0+266LC5Y				
BNK 1402-3RRG2+266LC7Y				
BNK 1402-3RRG0+316LC3Y	200	235	249	316
BNK 1402-3RRG0+316LC5Y				
BNK 1402-3RRG2+316LC7Y				
BNK 1402-3RRG0+416LC3Y	300	335	349	416
BNK 1402-3RRG0+416LC5Y				
BNK 1402-3RRG2+416LC7Y				

Note) A stainless steel type is also available for model BNK1402. When placing an order, add symbol "M" to the end of the model number.

(Example) BNK1402-3RRG0+166LC3Y M
Symbol for stainless steel type

For accuracy grades C3 and C5, clearance GT is also available as standard.

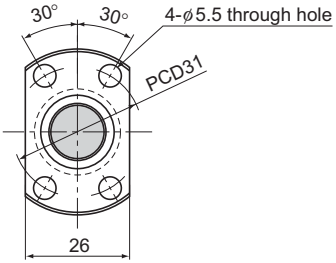

X-X arrow view

Ball Screw Specifications			
Lead (mm)	2		
BCD(mm)	14.3		
Thread minor diameter (mm)	13		
Threading direction, No. of threaded grooves	Rightward, 1		
No. of circuits	1 turn × 3 rows		
Clearance symbol	G0	GT	G2
Axial clearance (mm)	0	0.005 or less	0.02 or less
Basic dynamic load rating Ca (kN)	1.8	1.8	1.8
Basic static load rating C_0a(kN)	4.3	4.3	4.3
Preload torque (N-m)	4.9×10^{-3} to 4.9×10^{-2}	—	—
Spacer ball	None	None	None
Rigidity value(N/μm)	140		
Circulation method	Deflector		

Unit: mm

	Runout of the screw shaft axis D	Runout of the nut circumference H	Flange perpendicularity I	Runout of the thread groove surface J	Lead angle accuracy: Representative travel distance error	Lead angle accuracy: Fluctuation	Nut mass kg	Shaft mass kg/m
	0.02	0.01	0.008	0.009	±0.008	0.008	0.15	1.0
	0.025	0.012	0.01	0.012	±0.018	0.018	0.15	1.0
	0.04	0.02	0.014	0.014	Travel distance: ±0.05/300		0.15	1.0
	0.025	0.01	0.008	0.009	±0.01	0.008	0.15	1.0
	0.03	0.012	0.01	0.012	±0.02	0.018	0.15	1.0
	0.045	0.02	0.014	0.014	Travel distance: ±0.05/300		0.15	1.0
	0.025	0.01	0.008	0.009	±0.01	0.008	0.15	1.0
	0.03	0.012	0.01	0.012	±0.02	0.018	0.15	1.0
	0.045	0.02	0.014	0.014	Travel distance: ±0.05/300		0.15	1.0
	0.03	0.01	0.008	0.009	±0.012	0.008	0.15	1.0
	0.04	0.012	0.01	0.012	±0.023	0.018	0.15	1.0
	0.055	0.02	0.014	0.014	Travel distance: ±0.05/300		0.15	1.0
	0.04	0.01	0.008	0.009	±0.013	0.01	0.15	1.0
	0.05	0.012	0.01	0.012	±0.025	0.02	0.15	1.0
	0.06	0.02	0.014	0.014	Travel distance: ±0.05/300		0.15	1.0

BNK1404-3 Shaft diameter: 14; lead: 4

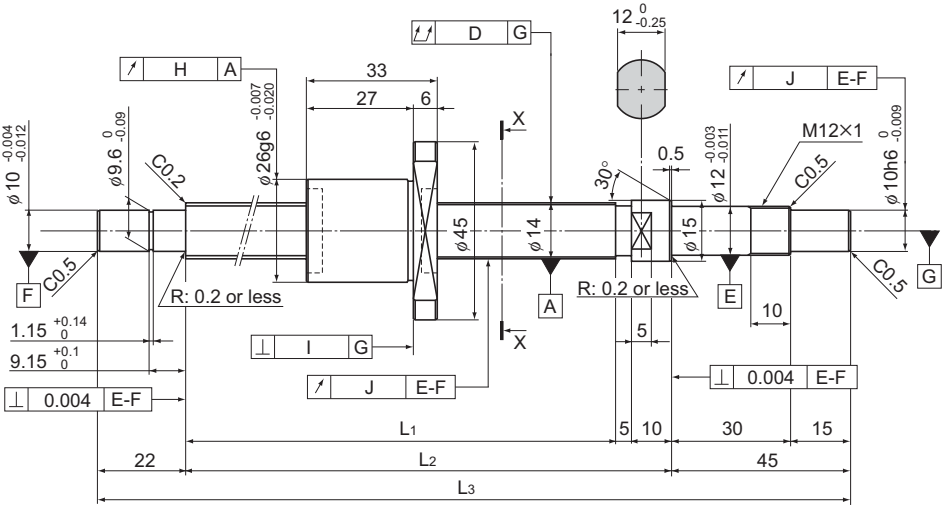

Model No.	Stroke	Screw shaft length		
		L_1	L_2	L_3
BNK 1404-3RRG0+230LC3Y	100	148	163	230
BNK 1404-3RRG0+230LC5Y				
BNK 1404-3RRG2+230LC7Y				
BNK 1404-3RRG0+280LC3Y	150	198	213	280
BNK 1404-3RRG0+280LC5Y				
BNK 1404-3RRG2+280LC7Y				
BNK 1404-3RRG0+330LC3Y	200	248	263	330
BNK 1404-3RRG0+330LC5Y				
BNK 1404-3RRG2+330LC7Y				
BNK 1404-3RRG0+430LC3Y	300	348	363	430
BNK 1404-3RRG0+430LC5Y				
BNK 1404-3RRG2+430LC7Y				
BNK 1404-3RRG0+530LC3Y	400	448	463	530
BNK 1404-3RRG0+530LC5Y				
BNK 1404-3RRG2+530LC7Y				

Note) A stainless steel type is also available for model BNK1404. When placing an order, add symbol "M" to the end of the model number.

(Example) BNK1404-3RRG0+230LC3Y M
Symbol for stainless steel type

For accuracy grades C3 and C5, clearance GT is also available as standard.

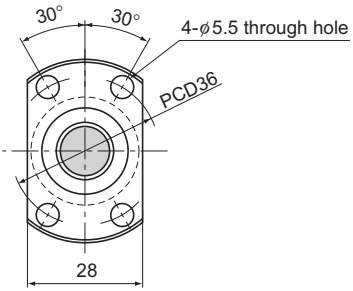

X-X arrow view

Ball Screw Specifications			
Lead (mm)	4		
BCD(mm)	14.65		
Thread minor diameter (mm)	12.2		
Threading direction, No. of threaded grooves	Rightward, 1		
No. of circuits	1 turn × 3 rows		
Clearance symbol	G0	GT	G2
Axial clearance (mm)	0	0.005 or less	0.02 or less
Basic dynamic load rating Ca (kN)	4.2	4.2	4.2
Basic static load rating C_0a(kN)	7.6	7.6	7.6
Preload torque (N-m)	9.8×10^{-3} to 6.9×10^{-2}	—	—
Spacer ball	None	None	None
Rigidity value(N/μm)	190		
Circulation method	Deflector		

Unit: mm

	Runout of the screw shaft axis D	Runout of the nut circumference H	Flange perpendicularity I	Runout of the thread groove surface J	Lead angle accuracy: Representative travel distance error	Lead angle accuracy: Fluctuation	Nut mass kg	Shaft mass kg/m
	0.025	0.01	0.008	0.009	±0.01	0.008	0.13	0.8
	0.03	0.012	0.01	0.012	±0.02	0.018	0.13	0.8
	0.045	0.02	0.014	0.014	Travel distance: ±0.05/300		0.13	0.8
	0.025	0.01	0.008	0.009	±0.01	0.008	0.13	0.8
	0.03	0.012	0.01	0.012	±0.02	0.018	0.13	0.8
	0.045	0.02	0.014	0.014	Travel distance: ±0.05/300		0.13	0.8
	0.03	0.01	0.008	0.009	±0.012	0.008	0.13	0.8
	0.04	0.012	0.01	0.012	±0.023	0.018	0.13	0.8
	0.055	0.02	0.014	0.014	Travel distance: ±0.05/300		0.13	0.8
	0.04	0.01	0.008	0.009	±0.013	0.01	0.13	0.8
	0.05	0.012	0.01	0.012	±0.025	0.02	0.13	0.8
	0.06	0.02	0.014	0.014	Travel distance: ±0.05/300		0.13	0.8
	0.045	0.01	0.008	0.009	±0.015	0.01	0.13	0.8
	0.055	0.012	0.01	0.012	±0.027	0.02	0.13	0.8
	0.075	0.02	0.014	0.014	Travel distance: ±0.05/300		0.13	0.8

BNK1408-2.5 Shaft diameter: 14; lead: 8

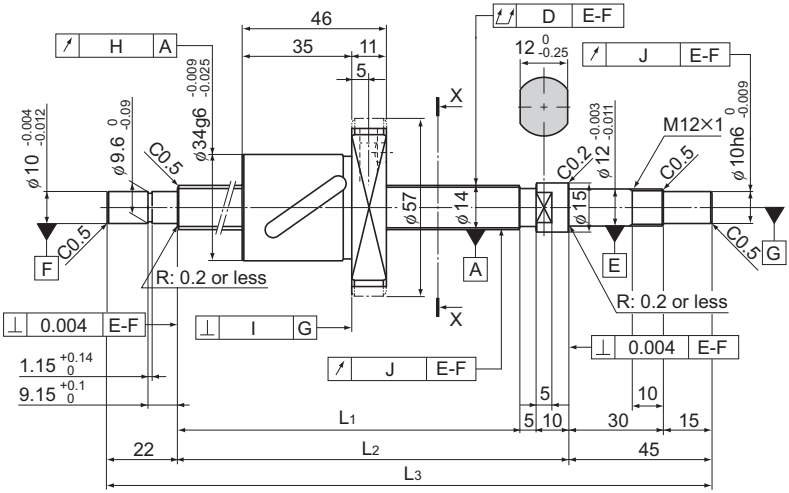

Model No.	Stroke	Screw shaft length		
		L_1	L_2	L_3
BNK 1408-2.5RRG0+321LC5Y	150	239	254	321
BNK 1408-2.5RRG2+321LC7Y				
BNK 1408-2.5RRG0+371LC5Y	200	289	304	371
BNK 1408-2.5RRG2+371LC7Y				
BNK 1408-2.5RRG0+421LC5Y	250	339	354	421
BNK 1408-2.5RRG2+421LC7Y				
BNK 1408-2.5RRG0+471LC5Y	300	389	404	471
BNK 1408-2.5RRG2+471LC7Y				
BNK 1408-2.5RRG0+521LC5Y	350	439	454	521
BNK 1408-2.5RRG2+521LC7Y				
BNK 1408-2.5RRG0+571LC5Y	400	489	504	571
BNK 1408-2.5RRG2+571LC7Y				
BNK 1408-2.5RRG0+621LC5Y	450	539	554	621
BNK 1408-2.5RRG2+621LC7Y				
BNK 1408-2.5RRG0+671LC5Y	500	589	604	671
BNK 1408-2.5RRG2+671LC7Y				
BNK 1408-2.5RRG0+721LC5Y	550	639	654	721
BNK 1408-2.5RRG2+721LC7Y				
BNK 1408-2.5RRG0+771LC5Y	600	689	704	771
BNK 1408-2.5RRG2+771LC7Y				
BNK 1408-2.5RRG0+871LC5Y	700	789	804	871
BNK 1408-2.5RRG2+871LC7Y				

Note) For accuracy grade C5, clearance GT is also standardized.
Plug the unused oil hole before using the product.

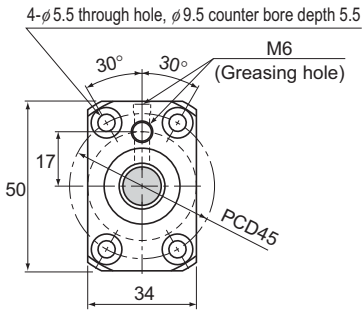

X-X arrow view

Ball Screw Specifications			
Lead (mm)	8		
BCD(mm)	14.75		
Thread minor diameter (mm)	11.2		
Threading direction, No. of threaded grooves	Rightward, 1		
No. of circuits	2.5 turns × 1 row		
Clearance symbol	G0	GT	G2
Axial clearance (mm)	0	0.005 or less	0.02 or less
Basic dynamic load rating Ca (kN)	4.3	6.9	6.9
Basic static load rating C_0a(kN)	5.8	11.5	11.5
Preload torque (N-m)	2×10^{-2} to 7.8×10^{-2}	—	—
Spacer ball	1 : 1	None	None
Rigidity value(N/μm)	80	150	
Circulation method	Return pipe		

Unit: mm

	Runout of the screw shaft axis	Runout of the nut circumference	Flange perpendicularity	Runout of the thread groove surface	Lead angle accuracy		Nut mass	Shaft mass
	D	H	I	J	Representative travel distance error	Fluctuation	kg	kg/m
	0.035	0.015	0.011	0.012	±0.023	0.018	0.29	0.84
	0.055	0.03	0.018	0.014	Travel distance: ±0.05/300		0.29	0.84
	0.035	0.015	0.011	0.012	±0.023	0.018	0.29	0.84
	0.055	0.03	0.018	0.014	Travel distance: ±0.05/300		0.29	0.84
	0.04	0.015	0.011	0.012	±0.025	0.02	0.29	0.84
	0.06	0.03	0.018	0.014	Travel distance: ±0.05/300		0.29	0.84
	0.04	0.015	0.011	0.012	±0.025	0.02	0.29	0.84
	0.06	0.03	0.018	0.014	Travel distance: ±0.05/300		0.29	0.84
	0.05	0.015	0.011	0.012	±0.027	0.02	0.29	0.84
	0.075	0.03	0.018	0.014	Travel distance: ±0.05/300		0.29	0.84
	0.05	0.015	0.011	0.012	±0.027	0.02	0.29	0.84
	0.075	0.03	0.018	0.014	Travel distance: ±0.05/300		0.29	0.84
	0.05	0.015	0.011	0.012	±0.03	0.023	0.29	0.84
	0.075	0.03	0.018	0.014	Travel distance: ±0.05/300		0.29	0.84
	0.065	0.015	0.011	0.012	±0.03	0.023	0.29	0.84
	0.09	0.03	0.018	0.014	Travel distance: ±0.05/300		0.29	0.84
	0.065	0.015	0.011	0.012	±0.035	0.025	0.29	0.84
	0.09	0.03	0.018	0.014	Travel distance: ±0.05/300		0.29	0.84
	0.065	0.015	0.011	0.012	±0.035	0.025	0.29	0.84
	0.09	0.03	0.018	0.014	Travel distance: ±0.05/300		0.29	0.84
	0.085	0.015	0.011	0.012	±0.035	0.025	0.29	0.84
	0.12	0.03	0.018	0.014	Travel distance: ±0.05/300		0.29	0.84

BNK1510-5.6 Shaft diameter: 15; lead: 10

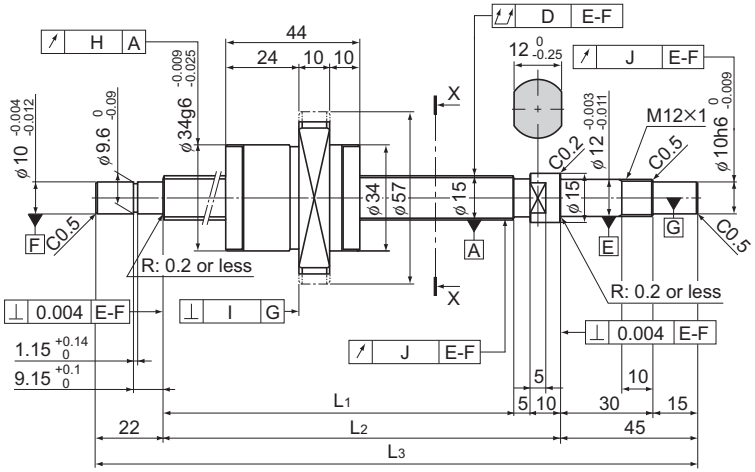

Model No.	Stroke	Screw shaft length		
		L_1	L_2	L_3
BNK 1510-5.6G0+321LC5Y	150	239	254	321
BNK 1510-5.6G2+321LC7Y				
BNK 1510-5.6G0+371LC5Y	200	289	304	371
BNK 1510-5.6G2+371LC7Y				
BNK 1510-5.6G0+421LC5Y	250	339	354	421
BNK 1510-5.6G2+421LC7Y				
BNK 1510-5.6G0+471LC5Y	300	389	404	471
BNK 1510-5.6G2+471LC7Y				
BNK 1510-5.6G0+521LC5Y	350	439	454	521
BNK 1510-5.6G2+521LC7Y				
BNK 1510-5.6G0+571LC5Y	400	489	504	571
BNK 1510-5.6G2+571LC7Y				
BNK 1510-5.6G0+621LC5Y	450	539	554	621
BNK 1510-5.6G2+621LC7Y				
BNK 1510-5.6G0+671LC5Y	500	589	604	671
BNK 1510-5.6G2+671LC7Y				
BNK 1510-5.6G0+721LC5Y	550	639	654	721
BNK 1510-5.6G2+721LC7Y				
BNK 1510-5.6G0+771LC5Y	600	689	704	771
BNK 1510-5.6G2+771LC7Y				
BNK 1510-5.6G0+871LC5Y	700	789	804	871
BNK 1510-5.6G2+871LC7Y				
BNK 1510-5.6G0+971LC5Y	800	889	904	971
BNK 1510-5.6G2+971LC7Y				

Note) For accuracy grade C5, clearance GT is also standardized.

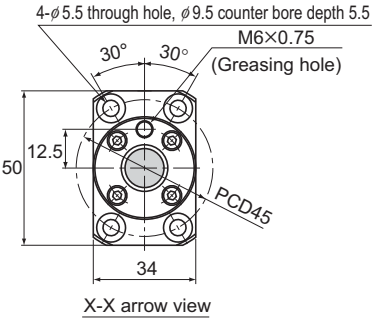

Ball Screw Specifications			
Lead (mm)	10		
BCD(mm)	15.75		
Thread minor diameter (mm)	12.5		
Threading direction, No. of threaded grooves	Rightward, 2		
No. of circuits	2.8 turns × 2 rows		
Clearance symbol	G0	GT	G2
Axial clearance (mm)	0	0.005 or less	0.02 or less
Basic dynamic load rating Ca (kN)	9	14.3	14.3
Basic static load rating C_0a(kN)	13.9	27.9	27.9
Preload torque (N-m)	2×10^{-2} to 9.8×10^{-2}	—	—
Spacer ball	1 : 1	None	None
Rigidity value(N/μm)	190	350	
Circulation method	End cap		

Unit: mm

	Runout of the screw shaft axis	Runout of the nut circumference	Flange perpendicularity	Runout of the thread groove surface	Lead angle accuracy		Nut mass	Shaft mass
					Representative travel distance error	Fluctuation		
	D	H	I	J			kg	kg/m
	0.035	0.015	0.011	0.012	±0.023	0.018	0.22	0.76
	0.055	0.03	0.018	0.014	Travel distance: ±0.05/300		0.22	0.76
	0.035	0.015	0.011	0.012	±0.023	0.018	0.22	0.76
	0.055	0.03	0.018	0.014	Travel distance: ±0.05/300		0.22	0.76
	0.04	0.015	0.011	0.012	±0.025	0.02	0.22	0.76
	0.06	0.03	0.018	0.014	Travel distance: ±0.05/300		0.22	0.76
	0.04	0.015	0.011	0.012	±0.025	0.02	0.22	0.76
	0.06	0.03	0.018	0.014	Travel distance: ±0.05/300		0.22	0.76
	0.05	0.015	0.011	0.012	±0.027	0.02	0.22	0.76
	0.075	0.03	0.018	0.014	Travel distance: ±0.05/300		0.22	0.76
	0.05	0.015	0.011	0.012	±0.027	0.02	0.22	0.76
	0.075	0.03	0.018	0.014	Travel distance: ±0.05/300		0.22	0.76
	0.05	0.015	0.011	0.012	±0.03	0.023	0.22	0.76
	0.075	0.03	0.018	0.014	Travel distance: ±0.05/300		0.22	0.76
	0.065	0.015	0.011	0.012	±0.03	0.023	0.22	0.76
	0.09	0.03	0.018	0.014	Travel distance: ±0.05/300		0.22	0.76
	0.065	0.015	0.011	0.012	±0.035	0.025	0.22	0.76
	0.09	0.03	0.018	0.014	Travel distance: ±0.05/300		0.22	0.76
	0.065	0.015	0.011	0.012	±0.035	0.025	0.22	0.76
	0.09	0.03	0.018	0.014	Travel distance: ±0.05/300		0.22	0.76
	0.085	0.015	0.011	0.012	±0.035	0.025	0.22	0.76
	0.12	0.03	0.018	0.014	Travel distance: ±0.05/300		0.22	0.76
	0.085	0.015	0.011	0.012	±0.04	0.027	0.22	0.76
	0.12	0.03	0.018	0.014	Travel distance: ±0.05/300		0.22	0.76

BNK1520-3 Shaft diameter: 15; lead: 20

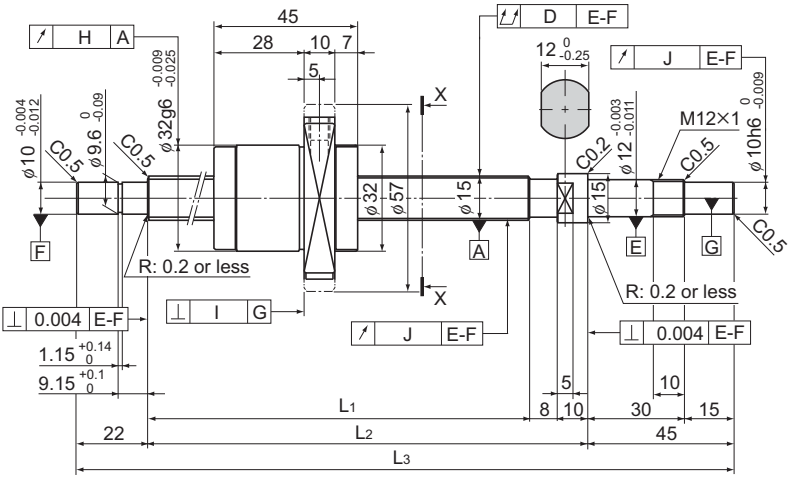

Model No.	Stroke	Screw shaft length		
		L_1	L_2	L_3
BNK 1520-3G0+321LC5Y	150	236	254	321
BNK 1520-3G2+321LC7Y				
BNK 1520-3G0+371LC5Y	200	286	304	371
BNK 1520-3G2+371LC7Y				
BNK 1520-3G0+421LC5Y	250	336	354	421
BNK 1520-3G2+421LC7Y				
BNK 1520-3G0+471LC5Y	300	386	404	471
BNK 1520-3G2+471LC7Y				
BNK 1520-3G0+521LC5Y	350	436	454	521
BNK 1520-3G2+521LC7Y				
BNK 1520-3G0+571LC5Y	400	486	504	571
BNK 1520-3G2+571LC7Y				
BNK 1520-3G0+621LC5Y	450	536	554	621
BNK 1520-3G2+621LC7Y				
BNK 1520-3G0+671LC5Y	500	586	604	671
BNK 1520-3G2+671LC7Y				
BNK 1520-3G0+721LC5Y	550	636	654	721
BNK 1520-3G2+721LC7Y				
BNK 1520-3G0+771LC5Y	600	686	704	771
BNK 1520-3G2+771LC7Y				
BNK 1520-3G0+871LC5Y	700	786	804	871
BNK 1520-3G2+871LC7Y				
BNK 1520-3G0+971LC5Y	800	886	904	971
BNK 1520-3G2+971LC7Y				

Note) For accuracy grade C5, clearance GT is also standardized.

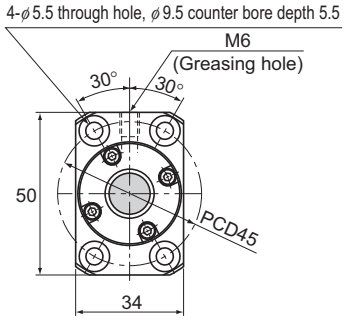

X-X arrow view

Ball Screw Specifications			
Lead (mm)	20		
BCD(mm)	15.75		
Thread minor diameter (mm)	12.5		
Threading direction, No. of threaded grooves	Rightward, 2		
No. of circuits	1.5 turns × 2 rows		
Clearance symbol	G0	GT	G2
Axial clearance (mm)	0	0.005 or less	0.02 or less
Basic dynamic load rating Ca (kN)	5.1	8	8
Basic static load rating C_0a(kN)	7.9	15.8	15.8
Preload torque (N-m)	2×10^{-2} to 8.8×10^{-2}	—	—
Spacer ball	1 : 1	None	None
Rigidity value(N/μm)	110	200	
Circulation method	End cap		

Unit: mm

	Runout of the screw shaft axis	Runout of the nut circumference	Flange perpendicularity	Runout of the thread groove surface	Lead angle accuracy		Nut mass	Shaft mass
	D	H	I	J	Representative travel distance error	Fluctuation	kg	kg/m
	0.035	0.015	0.011	0.012	±0.023	0.018	0.32	1.05
	0.055	0.03	0.018	0.014	Travel distance: ±0.05/300		0.32	1.05
	0.035	0.015	0.011	0.012	±0.023	0.018	0.32	1.05
	0.055	0.03	0.018	0.014	Travel distance: ±0.05/300		0.32	1.05
	0.04	0.015	0.011	0.012	±0.025	0.02	0.32	1.05
	0.06	0.03	0.018	0.014	Travel distance: ±0.05/300		0.32	1.05
	0.04	0.015	0.011	0.012	±0.025	0.02	0.32	1.05
	0.06	0.03	0.018	0.014	Travel distance: ±0.05/300		0.32	1.05
	0.05	0.015	0.011	0.012	±0.027	0.02	0.32	1.05
	0.075	0.03	0.018	0.014	Travel distance: ±0.05/300		0.32	1.05
	0.05	0.015	0.011	0.012	±0.027	0.02	0.32	1.05
	0.075	0.03	0.018	0.014	Travel distance: ±0.05/300		0.32	1.05
	0.05	0.015	0.011	0.012	±0.03	0.023	0.32	1.05
	0.075	0.03	0.018	0.014	Travel distance: ±0.05/300		0.32	1.05
	0.065	0.015	0.011	0.012	±0.03	0.023	0.32	1.05
	0.09	0.03	0.018	0.014	Travel distance: ±0.05/300		0.32	1.05
	0.065	0.015	0.011	0.012	±0.035	0.025	0.32	1.05
	0.09	0.03	0.018	0.014	Travel distance: ±0.05/300		0.32	1.05
	0.065	0.015	0.011	0.012	±0.035	0.025	0.32	1.05
	0.09	0.03	0.018	0.014	Travel distance: ±0.05/300		0.32	1.05
	0.085	0.015	0.011	0.012	±0.035	0.025	0.32	1.05
	0.12	0.03	0.018	0.014	Travel distance: ±0.05/300		0.32	1.05
	0.085	0.015	0.011	0.012	±0.04	0.027	0.32	1.05
	0.12	0.03	0.018	0.014	Travel distance: ±0.05/300		0.32	1.05

BNK1616-3.6 Shaft diameter: 16; lead: 16

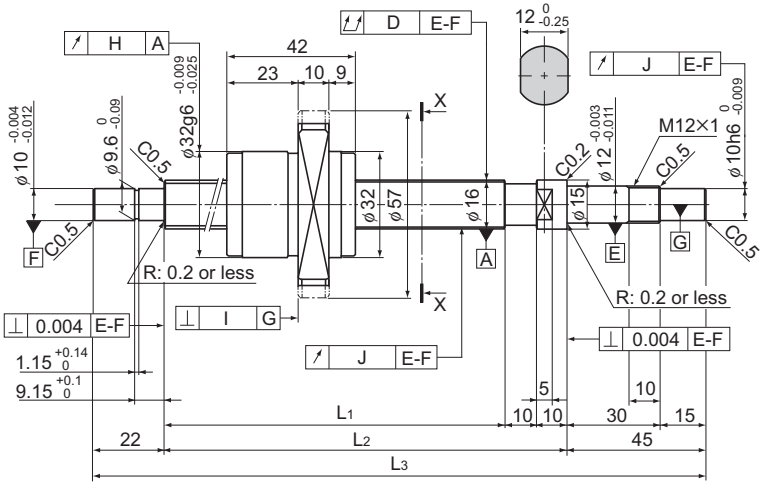

Model No.	Stroke	Screw shaft length		
		L_1	L_2	L_3
BNK 1616-3.6G0+321LC5Y	150	234	254	321
BNK 1616-3.6G2+321LC7Y				
BNK 1616-3.6G0+371LC5Y	200	284	304	371
BNK 1616-3.6G2+371LC7Y				
BNK 1616-3.6G0+421LC5Y	250	334	354	421
BNK 1616-3.6G2+421LC7Y				
BNK 1616-3.6G0+471LC5Y	300	384	404	471
BNK 1616-3.6G2+471LC7Y				
BNK 1616-3.6G0+521LC5Y	350	434	454	521
BNK 1616-3.6G2+521LC7Y				
BNK 1616-3.6G0+571LC5Y	400	484	504	571
BNK 1616-3.6G2+571LC7Y				
BNK 1616-3.6G0+621LC5Y	450	534	554	621
BNK 1616-3.6G2+621LC7Y				
BNK 1616-3.6G0+671LC5Y	500	584	604	671
BNK 1616-3.6G2+671LC7Y				
BNK 1616-3.6G0+721LC5Y	550	634	654	721
BNK 1616-3.6G2+721LC7Y				
BNK 1616-3.6G0+771LC5Y	600	684	704	771
BNK 1616-3.6G2+771LC7Y				
BNK 1616-3.6G0+871LC5Y	700	784	804	871
BNK 1616-3.6G2+871LC7Y				
BNK 1616-3.6G0+971LC5Y	800	884	904	971
BNK 1616-3.6G2+971LC7Y				

Note) For accuracy grade C5, clearance GT is also standardized.

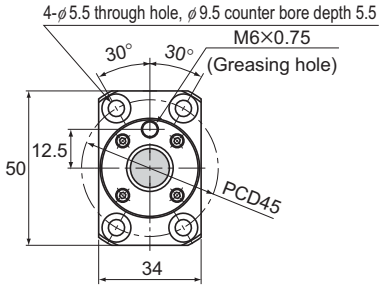

X-X arrow view

Ball Screw Specifications			
Lead (mm)	16		
BCD(mm)	16.65		
Thread minor diameter (mm)	13.7		
Threading direction, No. of threaded grooves	Rightward, 2		
No. of circuits	1.8 turns × 2 rows		
Clearance symbol	G0	GT	G2
Axial clearance (mm)	0	0.005 or less	0.02 or less
Basic dynamic load rating Ca (kN)	4.4	7.1	7.1
Basic static load rating C_0a(kN)	7.2	14.3	14.3
Preload torque (N-m)	2×10^{-2} to 9.8×10^{-2}	—	—
Spacer ball	1 : 1	None	None
Rigidity value(N/μm)	120	230	
Circulation method	End cap		

Unit: mm

	Runout of the screw shaft axis	Runout of the nut circumference	Flange perpendicularity	Runout of the thread groove surface	Lead angle accuracy		Nut mass	Shaft mass
					Representative travel distance error	Fluctuation		
	D	H	I	J			kg	kg/m
	0.035	0.015	0.011	0.012	±0.023	0.018	0.2	1.25
	0.055	0.03	0.018	0.014	Travel distance: ±0.05/300		0.2	1.25
	0.035	0.015	0.011	0.012	±0.023	0.018	0.2	1.25
	0.055	0.03	0.018	0.014	Travel distance: ±0.05/300		0.2	1.25
	0.04	0.015	0.011	0.012	±0.025	0.02	0.2	1.25
	0.06	0.03	0.018	0.014	Travel distance: ±0.05/300		0.2	1.25
	0.04	0.015	0.011	0.012	±0.025	0.02	0.2	1.25
	0.06	0.03	0.018	0.014	Travel distance: ±0.05/300		0.2	1.25
	0.05	0.015	0.011	0.012	±0.027	0.02	0.2	1.25
	0.075	0.03	0.018	0.014	Travel distance: ±0.05/300		0.2	1.25
	0.05	0.015	0.011	0.012	±0.027	0.02	0.2	1.25
	0.075	0.03	0.018	0.014	Travel distance: ±0.05/300		0.2	1.25
	0.05	0.015	0.011	0.012	±0.03	0.023	0.2	1.25
	0.075	0.03	0.018	0.014	Travel distance: ±0.05/300		0.2	1.25
	0.065	0.015	0.011	0.012	±0.03	0.023	0.2	1.25
	0.09	0.03	0.018	0.014	Travel distance: ±0.05/300		0.2	1.25
	0.065	0.015	0.011	0.012	±0.035	0.025	0.2	1.25
	0.09	0.03	0.018	0.014	Travel distance: ±0.05/300		0.2	1.25
	0.065	0.015	0.011	0.012	±0.035	0.025	0.2	1.25
	0.09	0.03	0.018	0.014	Travel distance: ±0.05/300		0.2	1.25
	0.085	0.015	0.011	0.012	±0.035	0.025	0.2	1.25
	0.12	0.03	0.018	0.014	Travel distance: ±0.05/300		0.2	1.25
	0.085	0.015	0.011	0.012	±0.04	0.027	0.2	1.25
	0.12	0.03	0.018	0.014	Travel distance: ±0.05/300		0.2	1.25

Description of Each Option⇒A15-165 Dimensions⇒B15-227

BNK2010-2.5 Shaft diameter: 20; lead: 10

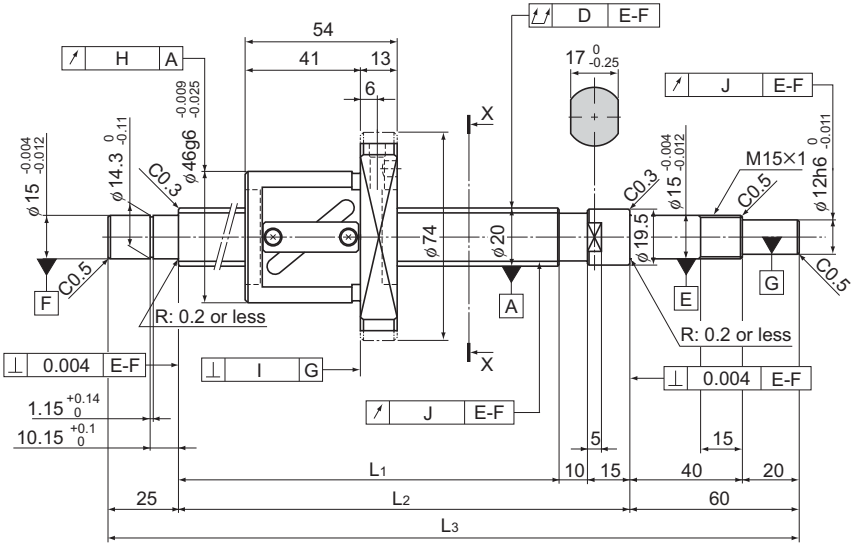

Model No.	Stroke	Screw shaft length		
		L_1	L_2	L_3
BNK 2010-2.5RRG0+499LC5Y	300	389	414	499
BNK 2010-2.5RRG2+499LC7Y				
BNK 2010-2.5RRG0+599LC5Y	400	489	514	599
BNK 2010-2.5RRG2+599LC7Y				
BNK 2010-2.5RRG0+699LC5Y	500	589	614	699
BNK 2010-2.5RRG2+699LC7Y				
BNK 2010-2.5RRG0+799LC5Y	600	689	714	799
BNK 2010-2.5RRG2+799LC7Y				
BNK 2010-2.5RRG0+899LC5Y	700	789	814	899
BNK 2010-2.5RRG2+899LC7Y				
BNK 2010-2.5RRG0+999LC5Y	800	889	914	999
BNK 2010-2.5RRG2+999LC7Y				
BNK 2010-2.5RRG0+1099LC5Y	900	989	1014	1099
BNK 2010-2.5RRG2+1099LC7Y				
BNK 2010-2.5RRG0+1199LC5Y	1000	1089	1114	1199
BNK 2010-2.5RRG2+1199LC7Y				
BNK 2010-2.5RRG0+1299LC5Y	1100	1189	1214	1299
BNK 2010-2.5RRG2+1299LC7Y				

Note) For accuracy grade C5, clearance GT is also standardized.
Plug the unused oil hole before using the product.

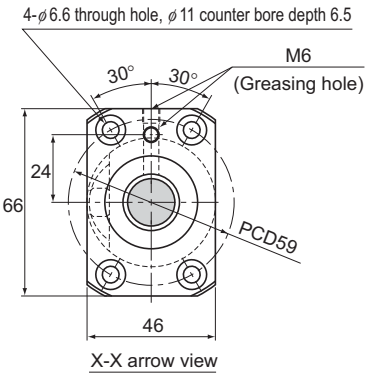

Ball Screw Specifications			
Lead (mm)	10		
BCD(mm)	21		
Thread minor diameter (mm)	16.4		
Threading direction, No. of threaded grooves	Rightward, 1		
No. of circuits	2.5 turns × 1 row		
Clearance symbol	G0	GT	G2
Axial clearance (mm)	0	0.005 or less	0.02 or less
Basic dynamic load rating Ca (kN)	7	11.1	11.1
Basic static load rating C_0a(kN)	11	22	22
Preload torque (N-m)	2×10^{-2} to 9.8×10^{-2}	—	—
Spacer ball	1 : 1	None	None
Rigidity value(N/μm)	110	210	
Circulation method	Return pipe		

Unit: mm

	Runout of the screw shaft axis	Runout of the nut circumference	Flange perpendicularity	Runout of the thread groove surface	Lead angle accuracy		Nut mass	Shaft mass
	D	H	I	J	Representative travel distance error	Fluctuation	kg	kg/m
	0.04	0.015	0.011	0.012	±0.025	0.02	0.58	1.81
	0.06	0.03	0.018	0.014	Travel distance: ±0.05/300		0.58	1.81
	0.05	0.015	0.011	0.012	±0.027	0.02	0.58	1.81
	0.075	0.03	0.018	0.014	Travel distance: ±0.05/300		0.58	1.81
	0.065	0.015	0.011	0.012	±0.03	0.023	0.58	1.81
	0.09	0.03	0.018	0.014	Travel distance: ±0.05/300		0.58	1.81
	0.065	0.015	0.011	0.012	±0.035	0.025	0.58	1.81
	0.09	0.03	0.018	0.014	Travel distance: ±0.05/300		0.58	1.81
	0.085	0.015	0.011	0.012	±0.035	0.025	0.58	1.81
	0.12	0.03	0.018	0.014	Travel distance: ±0.05/300		0.58	1.81
	0.085	0.015	0.011	0.012	±0.04	0.027	0.58	1.81
	0.12	0.03	0.018	0.014	Travel distance: ±0.05/300		0.58	1.81
	0.11	0.015	0.011	0.012	±0.04	0.027	0.58	1.81
	0.15	0.03	0.018	0.014	Travel distance: ±0.05/300		0.58	1.81
	0.11	0.015	0.011	0.012	±0.046	0.03	0.58	1.81
	0.15	0.03	0.018	0.014	Travel distance: ±0.05/300		0.58	1.81
	0.15	0.015	0.011	0.012	±0.046	0.03	0.58	1.81
	0.19	0.03	0.018	0.014	Travel distance: ±0.05/300		0.58	1.81

BNK2020-3.6 Shaft diameter: 20; lead: 20

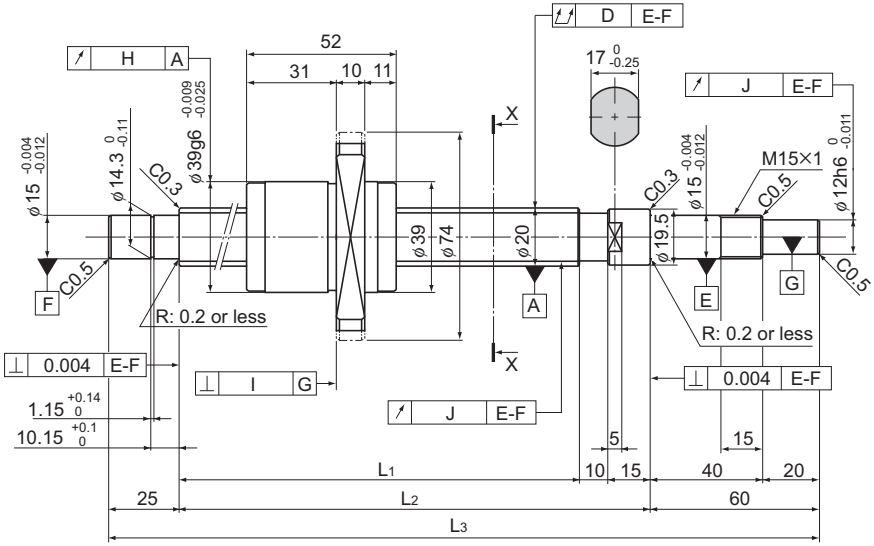

Model No.	Stroke	Screw shaft length		
		L_1	L_2	L_3
BNK 2020-3.6G0+520LC5Y	300	410	435	520
BNK 2020-3.6G2+520LC7Y				
BNK 2020-3.6G0+620LC5Y	400	510	535	620
BNK 2020-3.6G2+620LC7Y				
BNK 2020-3.6G0+720LC5Y	500	610	635	720
BNK 2020-3.6G2+720LC7Y				
BNK 2020-3.6G0+820LC5Y	600	710	735	820
BNK 2020-3.6G2+820LC7Y				
BNK 2020-3.6G0+920LC5Y	700	810	835	920
BNK 2020-3.6G2+920LC7Y				
BNK 2020-3.6G0+1020LC5Y	800	910	935	1020
BNK 2020-3.6G2+1020LC7Y				
BNK 2020-3.6G0+1120LC5Y	900	1010	1035	1120
BNK 2020-3.6G2+1120LC7Y				
BNK 2020-3.6G0+1220LC5Y	1000	1110	1135	1220
BNK 2020-3.6G2+1220LC7Y				
BNK 2020-3.6G0+1320LC5Y	1100	1210	1235	1320
BNK 2020-3.6G2+1320LC7Y				

Note) For accuracy grade C5, clearance GT is also standardized.

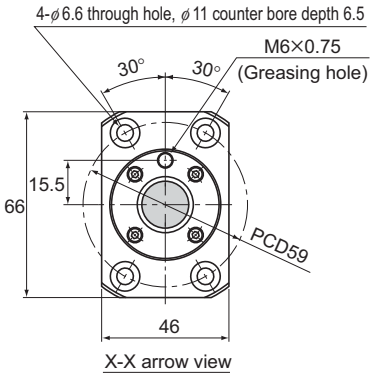

Ball Screw Specifications			
Lead (mm)	20		
BCD(mm)	20.75		
Thread minor diameter (mm)	17.5		
Threading direction, No. of threaded grooves	Rightward, 2		
No. of circuits	1.8 turns × 2 rows		
Clearance symbol	G0	GT	G2
Axial clearance (mm)	0	0.005 or less	0.02 or less
Basic dynamic load rating Ca (kN)	7	11.1	11.1
Basic static load rating C_0a(kN)	12.3	24.7	24.7
Preload torque (N-m)	2×10^{-2} to 9.8×10^{-2}	—	—
Spacer ball	1 : 1	None	None
Rigidity value(N/μm)	160	290	
Circulation method	End cap		

Unit: mm

	Runout of the screw shaft axis D	Runout of the nut circumference H	Flange perpendicularity I	Runout of the thread groove surface J	Lead angle accuracy: Representative travel distance error	Lead angle accuracy: Fluctuation	Nut mass kg	Shaft mass kg/m
	0.05	0.015	0.011	0.012	±0.027	0.02	0.39	2.04
	0.075	0.03	0.018	0.014	Travel distance: ±0.05/300		0.39	2.04
	0.05	0.015	0.011	0.012	±0.03	0.023	0.39	2.04
	0.075	0.03	0.018	0.014	Travel distance: ±0.05/300		0.39	2.04
	0.065	0.015	0.011	0.012	±0.03	0.023	0.39	2.04
	0.09	0.03	0.018	0.014	Travel distance: ±0.05/300		0.39	2.04
	0.085	0.015	0.011	0.012	±0.035	0.025	0.39	2.04
	0.12	0.03	0.018	0.014	Travel distance: ±0.05/300		0.39	2.04
	0.085	0.015	0.011	0.012	±0.04	0.027	0.39	2.04
	0.12	0.03	0.018	0.014	Travel distance: ±0.05/300		0.39	2.04
	0.11	0.015	0.011	0.012	±0.04	0.027	0.39	2.04
	0.15	0.03	0.018	0.014	Travel distance: ±0.05/300		0.39	2.04
	0.11	0.015	0.011	0.012	±0.046	0.03	0.39	2.04
	0.15	0.03	0.018	0.014	Travel distance: ±0.05/300		0.39	2.04
	0.11	0.015	0.011	0.012	±0.046	0.03	0.39	2.04
	0.15	0.03	0.018	0.014	Travel distance: ±0.05/300		0.39	2.04
	0.15	0.015	0.011	0.012	±0.046	0.03	0.39	2.04
	0.19	0.03	0.018	0.014	Travel distance: ±0.05/300		0.39	2.04

BNK2520-3.6 Shaft diameter: 25; lead: 20

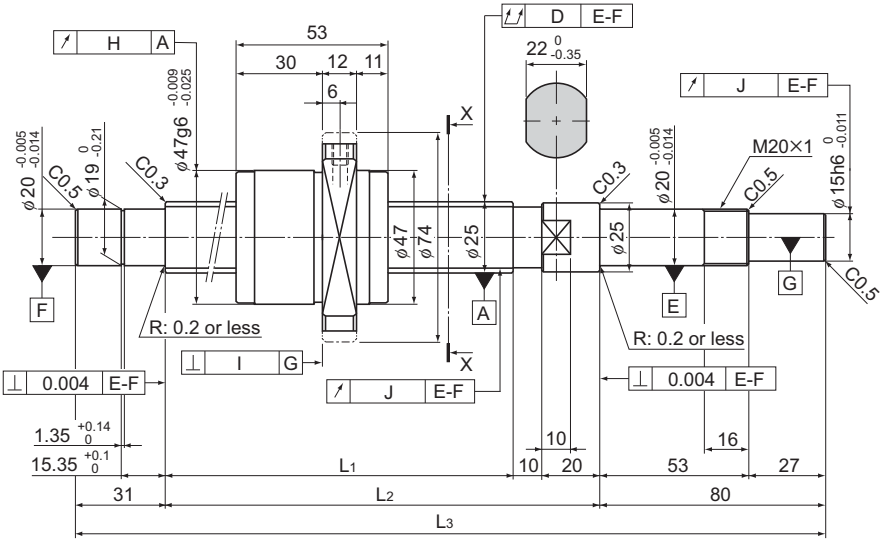

Model No.	Stroke	Screw shaft length		
		L_1	L_2	L_3
BNK 2520-3.6G0+751LC5Y	500	610	640	751
BNK 2520-3.6G2+751LC7Y				
BNK 2520-3.6G0+851LC5Y	600	710	740	851
BNK 2520-3.6G2+851LC7Y				
BNK 2520-3.6G0+1051LC5Y	800	910	940	1051
BNK 2520-3.6G2+1051LC7Y				
BNK 2520-3.6G0+1251LC5Y	1000	1110	1140	1251
BNK 2520-3.6G2+1251LC7Y				
BNK 2520-3.6G0+1451LC5Y	1200	1310	1340	1451
BNK 2520-3.6G2+1451LC7Y				
BNK 2520-3.6G0+1651LC5Y	1400	1510	1540	1651
BNK 2520-3.6G2+1651LC7Y				
BNK 2520-3.6G0+1851LC5Y	1600	1710	1740	1851
BNK 2520-3.6G2+1851LC7Y				

Note) For accuracy grade C5, clearance GT is also standardized.

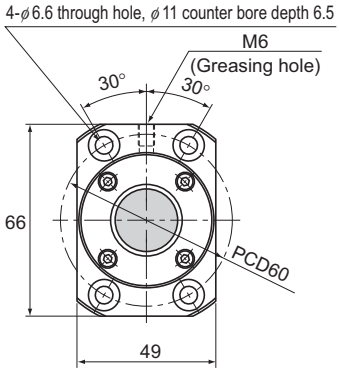

X-X arrow view

Ball Screw Specifications			
Lead (mm)	20		
BCD(mm)	26		
Thread minor diameter (mm)	21.9		
Threading direction, No. of threaded grooves	Rightward, 2		
No. of circuits	1.8 turns × 2 rows		
Clearance symbol	G0	GT	G2
Axial clearance (mm)	0	0.005 or less	0.02 or less
Basic dynamic load rating Ca (kN)	10.5	16.7	16.7
Basic static load rating C₀a(kN)	19	38	38
Preload torque (N-m)	4.9×10^{-2} to 2.2×10^{-2}	—	—
Spacer ball	1 : 1	None	None
Rigidity value(N/μm)	190	360	
Circulation method	End cap		

Unit: mm

	Runout of the screw shaft axis	Runout of the nut circumference	Flange perpendicularity	Runout of the thread groove surface	Lead angle accuracy		Nut mass	Shaft mass
	D	H	I	J	Representative travel distance error	Fluctuation	kg	kg/m
	0.055	0.015	0.011	0.013	±0.03	0.023	0.53	3.03
	0.07	0.03	0.018	0.02	Travel distance: ±0.05/300		0.53	3.03
	0.065	0.015	0.011	0.013	±0.035	0.025	0.53	3.03
	0.085	0.03	0.018	0.02	Travel distance: ±0.05/300		0.53	3.03
	0.085	0.015	0.011	0.013	±0.04	0.027	0.53	3.03
	0.1	0.03	0.018	0.02	Travel distance: ±0.05/300		0.53	3.03
	0.11	0.015	0.011	0.013	±0.046	0.03	0.53	3.03
	0.13	0.03	0.018	0.02	Travel distance: ±0.05/300		0.53	3.03
	0.11	0.015	0.011	0.013	±0.054	0.035	0.53	3.03
	0.13	0.03	0.018	0.02	Travel distance: ±0.05/300		0.53	3.03
	0.14	0.015	0.011	0.013	±0.054	0.035	0.53	3.03
	0.17	0.03	0.018	0.02	Travel distance: ±0.05/300		0.53	3.03
	0.14	0.015	0.011	0.013	±0.065	0.04	0.53	3.03
	0.17	0.03	0.018	0.02	Travel distance: ±0.05/300		0.53	3.03

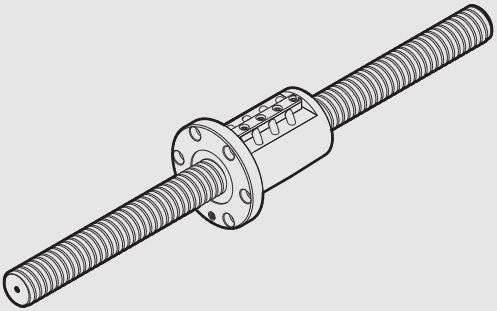

Precision Ball Screw Models BIF, DIK, BNFN, DKN, BLW, BNF, DK, MDK, BLK/WGF and BNT

Ball Screw

B Product Specifications

Dimensional Drawing, Dimensional Table

Preload Type of Precision Ball Screw B15-98 | B15-130

No Preload Type of Precision Ball Screw B15-132 | B15-160

No Preload Type of Precision Ball Screw (Square Nut) B15-162

Model Number Coding B15-164

Options

Dimensions of the Ball Screw Nut Attached with Wiper Ring W and QZ Lubricator B15-228

A Technical Descriptions of the Products (Separate)

Technical Descriptions

Structure and Features A15-113

Types and Features A15-117

Service Life A15-44

Axial Clearance A15-25

Accuracy Standards A15-18

* Please see the separate "A Technical Descriptions of the Products".

Preload Type of Precision Ball Screw

Screw shaft outer diameter	14 to 18
Lead	4 to 16

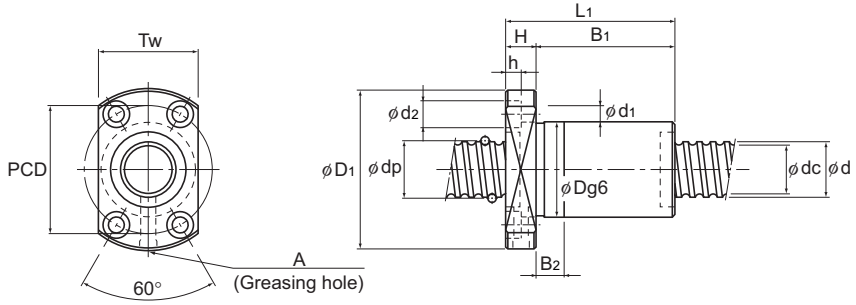

DIK (1404 to 2510)

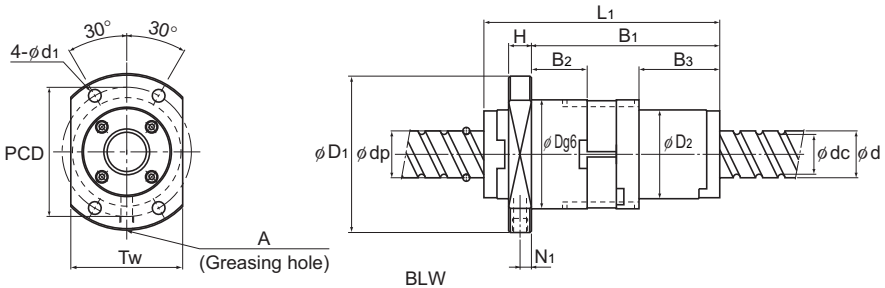

BLW

Screw shaft outer diameter d	Lead Ph	Model No.	Ball center-to-center diameter dp	Thread minor diameter dc	No. of loaded circuits Rows x turns	Basic load rating Ca kN	Basic load rating C_0a kN	Rigidity K N/μm	Outer diameter D	Flange diameter D_1	D_2
14	4	DIK 1404-4	14.5	11.8	2×1	3	5.1	190	26	45	—
		DIK 1404-6	14.5	11.8	3×1	4.2	7.7	280	26	45	—
15	10	BLW 1510-5.6	15.75	12.5	2×2.8	14.3	27.8	680	43	64	34
16	4	BNFN 1604-3	16.5	13.8	2×1.5	5.1	10.5	350	36	59	—
	5	BIF 1605-5	16.75	13.2	1×2.5	7.4	13.9	330	40	60	—
		DIK 1605-6	16.75	13.2	3×1	7.4	13	310	30	49	—
		BNFN 1605-2.5	16.75	13.2	1×2.5	7.4	13.9	330	40	60	—
		BNFN 1605-3	16.75	13.2	2×1.5	8.7	16.8	390	40	60	—
		BNFN 1605-5	16.75	13.2	2×2.5	13.5	27.8	640	40	60	—
	6	BIF 1606-5	16.8	13.2	1×2.5	7.5	14	330	40	60	—
	10	BNFN 1610-1.5	16.8	13.2	1×1.5	4.8	8.5	210	40	63	—
	16	BLW 1616-3.6	16.65	13.7	2×1.8	7.1	14.3	440	41	60	32
18	10	BIF 1810-3	18.8	15.5	1×1.5	5.1	9.6	230	42	65	—
		BNFN 1810-2.5	18.8	15.5	1×2.5	7.8	15.9	360	42	65	—
		BNFN 1810-3	18.8	15.5	2×1.5	9.2	19.1	430	42	65	—

Note) The model numbers in dimmed type indicate semi-standard types.
If desiring them, contact THK.
Model BLW cannot be attached with seal.

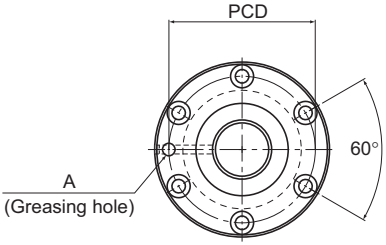

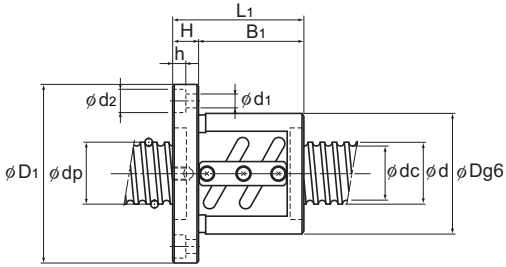

BIF

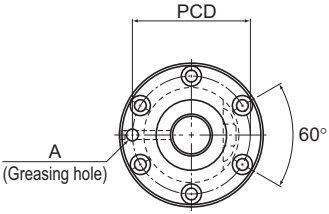

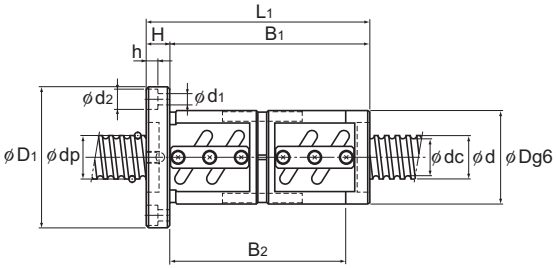

BNFN

Unit: mm

Nut dimensions												Screw shaft inertial moment/mm	Nut mass	Shaft mass
Overall length L_1	H	B_1	B_2	B_3	PCD	d_1	d_2	h	Tw	N_1	Greasing hole A	kg・cm²/mm	kg	kg/m
48	10	38	10	—	35	4.5	8	4.5	29	—	M6	2.96×10^{-4}	0.2	1.0
60	10	50	10	—	35	4.5	8	4.5	29	—	M6	2.96×10^{-4}	0.23	1.0
89	10	69	18.7	28.6	52	5.5	—	—	46	5	M6	3.9×10^{-4}	0.81	1.07
85	11	74	—	—	47	5.5	9.5	5.5	—	—	M6	5.05×10^{-4}	0.67	1.35
56	10	46	—	—	50	4.5	8	4.5	—	—	M6	5.05×10^{-4}	0.56	1.25
60	10	50	10	—	39	4.5	8	4.5	31	—	M6	5.05×10^{-4}	0.3	1.25
76	10	66	55	—	50	4.5	8	4.5	—	—	M6	5.05×10^{-4}	0.66	1.25
96	10	86	75	—	50	4.5	8	4.5	—	—	M6	5.05×10^{-4}	0.81	1.25
106	10	96	85	—	50	4.5	8	4.5	—	—	M6	5.05×10^{-4}	0.88	1.25
62	10	52	—	—	50	4.5	8	4.5	—	—	M6	5.05×10^{-4}	0.56	1.25
72	11	61	—	—	51	5.5	9.5	5.5	—	—	M6	5.05×10^{-4}	0.67	1.41
84.5	10	65.5	18.1	27.1	49	4.5	—	—	44	6	M6	5.05×10^{-4}	0.67	1.42
75	12	63	—	—	53	5.5	9.5	5.5	—	—	M6	8.09×10^{-4}	0.75	1.81
119	12	107	94	—	53	5.5	9.5	5.5	—	—	M6	8.09×10^{-4}	1.09	1.81
135	12	123	110	—	53	5.5	9.5	5.5	—	—	M6	8.09×10^{-4}	1.21	1.81

For model number coding, see B15-164.

Preload Type of Precision Ball Screw

Screw shaft outer diameter	20
Lead	4 to 5

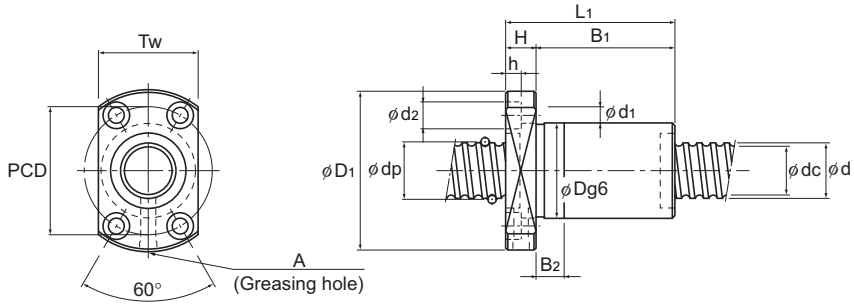

DIK (1404 to 2510)

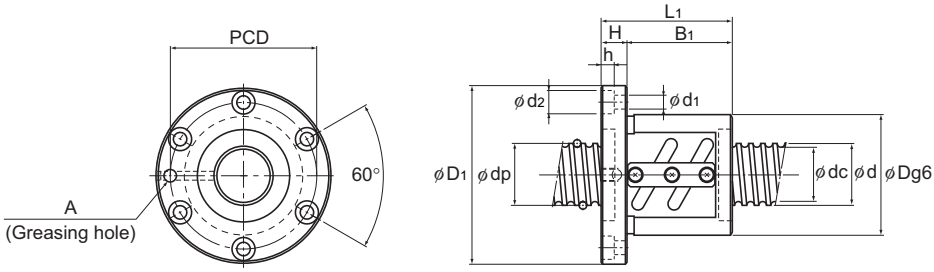

BIF

Screw shaft outer diameter d	Lead Ph	Model No.	Ball center-to-center diameter dp	Thread minor diameter dc	No. of loaded circuits Rows x turns	Basic load rating Ca kN	Basic load rating C0a kN	Rigidity K N/μm
20	4	BIF 2004-5	20.5	17.8	1×2.5	4.8	10.9	360
		DIK 2004-6	20.5	17.8	3×1	5.2	11.6	380
		DIK 2004-8	20.5	17.8	4×1	6.6	15.5	510
		BNFN 2004-2.5	20.5	17.8	1×2.5	4.8	10.9	360
		BNFN 2004-5	20.5	17.8	2×2.5	8.6	21.8	700
	5	BIF 2005-5	20.75	17.2	1×2.5	8.3	17.4	390
		DIK 2005-6	20.75	17.2	3×1	8.5	17.3	310
		BNFN 2005-2.5	20.75	17.2	1×2.5	8.3	17.4	390
		BNFN 2005-3	20.75	17.2	2×1.5	9.7	21	470
		BNFN 2005-3.5	20.75	17.2	1×3.5	11.1	24.5	550
		BNFN 2005-5	20.75	17.2	2×2.5	15.1	35	760

Note) The model numbers in dimmed type indicate semi-standard types.
If desiring them, contact THK.

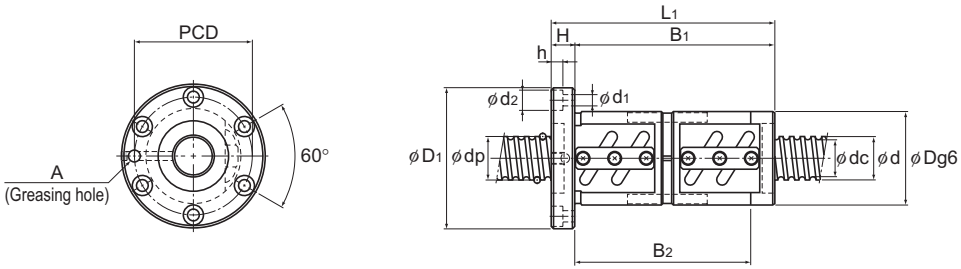

BNFN

Ball Screw

Unit: mm

	Nut dimensions										Screw shaft inertia moment/mm	Nut mass	Shaft mass
	Outer diameter D	Flange diameter D_1	Overall length L_1	H	B_1	B_2	PCD	$d_1 \times d_2 \times h$	Tw	Greasing hole A	kg・cm²/mm	kg	kg/m
	40	63	53	11	42	—	51	5.5×9.5×5.5	—	M6	1.23×10^{-3}	0.49	2.18
	32	56	62	11	51	15	44	5.5×9.5×5.5	35	M6	1.23×10^{-3}	0.34	2.18
	32	56	70	11	59	15	44	5.5×9.5×5.5	35	M6	1.23×10^{-3}	0.37	2.18
	40	63	69	11	58	—	51	5.5×9.5×5.5	—	M6	1.23×10^{-3}	0.58	2.18
	40	63	93	11	82	—	51	5.5×9.5×5.5	—	M6	1.23×10^{-3}	0.74	2.18
	44	67	56	11	45	—	55	5.5×9.5×5.5	—	M6	1.23×10^{-3}	0.57	2.06
	34	58	61	11	50	10	46	5.5×9.5×5.5	36	M6	1.23×10^{-3}	0.38	2.06
	44	67	76	11	65	53	55	5.5×9.5×5.5	—	M6	1.23×10^{-3}	0.77	2.06
	44	67	97	11	86	74	55	5.5×9.5×5.5	—	M6	1.23×10^{-3}	0.93	2.06
	44	67	85	11	74	62	55	5.5×9.5×5.5	—	M6	1.23×10^{-3}	0.86	2.06
	44	67	106	11	95	83	55	5.5×9.5×5.5	—	M6	1.23×10^{-3}	0.98	2.06

For model number coding, see B15-164.

Preload Type of Precision Ball Screw

Screw shaft outer diameter	20
Lead	6 to 20

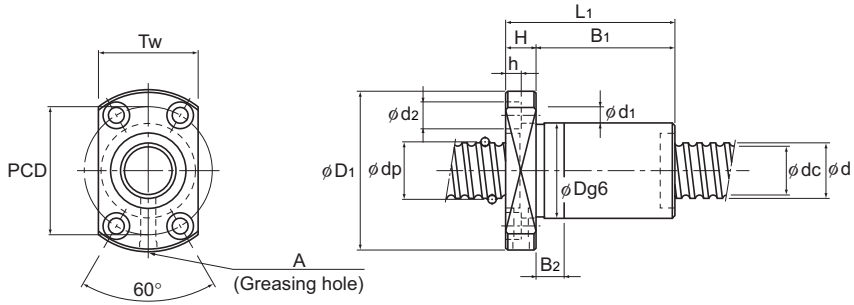

DIK (1404 to 2510)

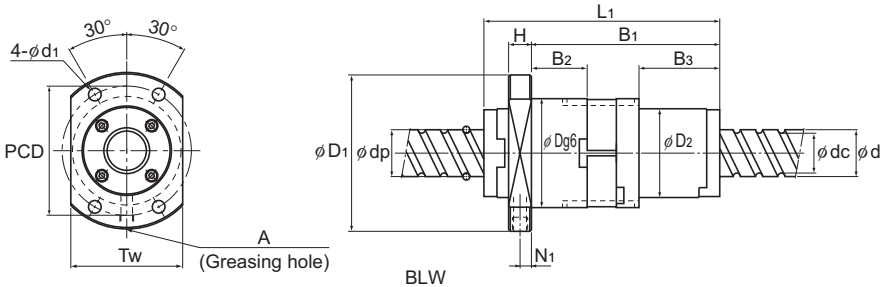

BLW

Screw shaft outer diameter d	Lead Ph	Model No.	Ball center-to-center diameter dp	Thread minor diameter dc	No. of loaded circuits Rows x turns	Basic load rating Ca kN	Basic load rating C_0a kN	Rigidity K N/μm	Outer diameter D	Flange diameter D_1	D_2
20	6	BIF 2006-3	20.75	17.2	1×1.5	5.4	10.5	250	48	71	—
		BIF 2006-5	20.75	17.2	1×2.5	8.3	17.5	390	48	71	—
		DIK 2006-6	21	16.4	3×1	11.4	21.5	410	35	58	—
		BNFN 2006-2.5	20.75	17.2	1×2.5	8.3	17.5	390	48	71	—
		BNFN 2006-3	20.75	17.2	2×1.5	9.7	21	470	48	71	—
		BNFN 2006-3.5	20.75	17.2	1×3.5	11.1	24.5	550	48	71	—
		BNFN 2006-5	20.75	17.2	2×2.5	15.1	35	760	48	71	—
	8	DIK 2008-4	21	16.4	2×1	8.1	14.4	280	35	58	—
		BNFN 2008-2.5	21	16.4	1×2.5	15.1	35	760	46	74	—
	10	BNFN 2010A-1.5	21	16.4	1×1.5	7.2	13.2	250	46	74	—
	12	BNFN 2012-1.5	21	16.4	1×1.5	7.1	12.5	250	48	71	—
	20	BLW 2020-3.6	20.75	17.5	2×1.8	11.1	24.7	570	48	69	39

Note) The model numbers in dimmed type indicate semi-standard types.
If desiring them, contact THK.
Model BLW cannot be attached with seal.

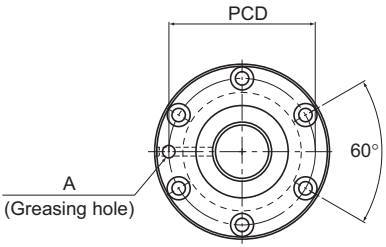

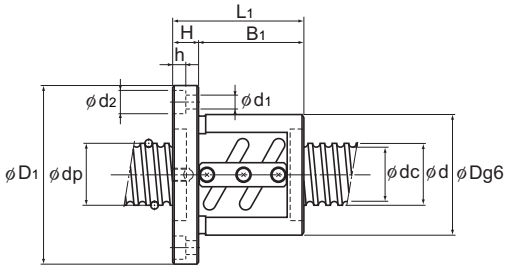

BIF

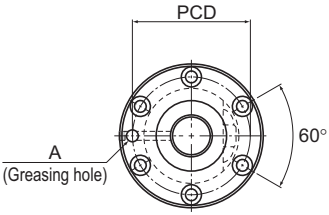

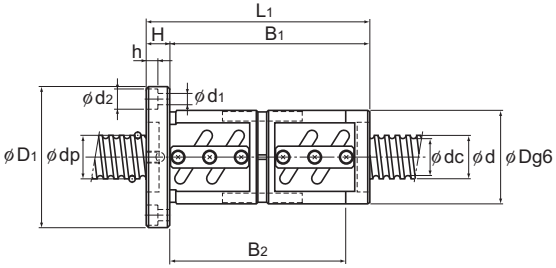

BNFN

Unit: mm

	Nut dimensions												Screw shaft inertial moment/mm	Nut mass	Shaft mass
	Overall length L_1	H	B_1	B_2	B_3	PCD	d_1	d_2	h	Tw	N_1	Greasing hole A	kg・cm²/mm	kg	kg/m
	56	11	45	—	—	59	5.5	9.5	5.5	—	—	M6	1.23×10^{-3}	0.74	2.13
	62	11	51	—	—	59	5.5	9.5	5.5	—	—	M6	1.23×10^{-3}	0.8	2.13
	76	11	65	15	—	46	5.5	9.5	5.5	36	—	M6	1.23×10^{-3}	0.48	1.93
	86	11	75	—	—	59	5.5	9.5	5.5	—	—	M6	1.23×10^{-3}	1.05	2.13
	110	11	99	—	—	59	5.5	9.5	5.5	—	—	M6	1.23×10^{-3}	1.3	2.13
	98	11	87	—	—	59	5.5	9.5	5.5	—	—	M6	1.23×10^{-3}	1.17	2.13
	122	11	111	—	—	59	5.5	9.5	5.5	—	—	M6	1.23×10^{-3}	1.42	2.13
	69	11	58	15	—	46	5.5	9.5	5.5	36	—	M6	1.23×10^{-3}	0.45	2.06
	100	15	85	—	—	59	5.5	9.5	5.5	—	—	M6	1.23×10^{-3}	1.08	2.06
	98	15	83	67	—	59	5.5	9.5	5.5	—	—	M6	1.23×10^{-3}	1.06	2.14
	100	18	82	—	—	59	5.5	9.5	5.5	—	—	M6	1.23×10^{-3}	1.3	2.19
	105	10	84	25	36	57	5.5	—	—	50	5	M6	1.23×10^{-3}	0.54	2.25

For model number coding, see B15-164.

Preload Type of Precision Ball Screw

Screw shaft outer diameter	25
Lead	4 to 6

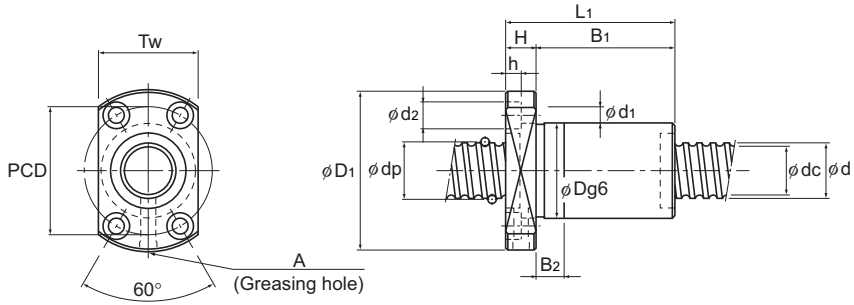

DIK (1404 to 2510)

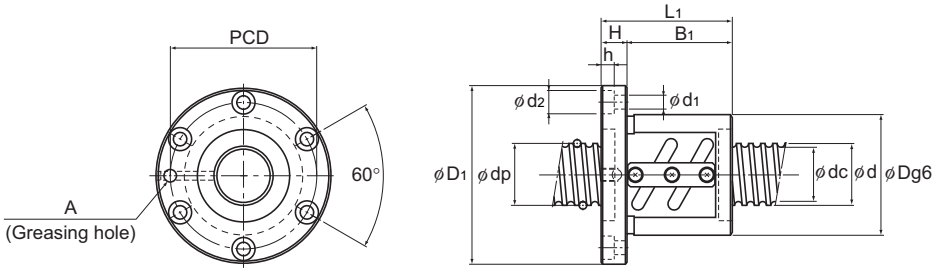

BIF

Screw shaft outer diameter d	Lead Ph	Model No.	Ball center-to-center diameter dp	Thread minor diameter dc	No. of loaded circuits Rows x turns	Basic load rating Ca kN	Basic load rating C0a kN	Rigidity K N/μm
25	4	DIK 2504-6	25.5	22.8	3×1	5.7	15	470
		DIK 2504-8	25.5	22.8	4×1	7.4	19.9	620
		○ BNFN 2504-2.5	25.5	22.8	1×2.5	5.2	13.7	420
		○ BNFN 2504-5	25.5	22.8	2×2.5	9.5	27.3	820
	5	DIK 2505-6	25.75	22.2	3×1	9.7	22.6	490
		○ BIF 2505-3	25.75	22.2	1×1.5	6	13.1	280
		○ BIF 2505-5	25.75	22.2	1×2.5	9.2	22	470
		○ BNFN 2505-2.5	25.75	22.2	1×2.5	9.2	22	470
		○ BNFN 2505-3	25.75	22.2	2×1.5	10.8	26.4	560
		○ BNFN 2505-3.5	25.75	22.2	1×3.5	12.3	30.7	650
		○ BNFN 2505-5	25.75	22.2	2×2.5	16.7	44	910
	6	DIK 2506-4	26	21.4	2×1	9.1	18	330
		DIK 2506-6	26	21.4	3×1	12.8	27	490

Note) The model numbers in dimmed type indicate semi-standard types. If desiring them, contact THK.
Those models marked with ○ can be attached with QZ Lubricator or the wiper ring.
For dimensions of the ball screw nut with either accessory being attached, see B15-228.

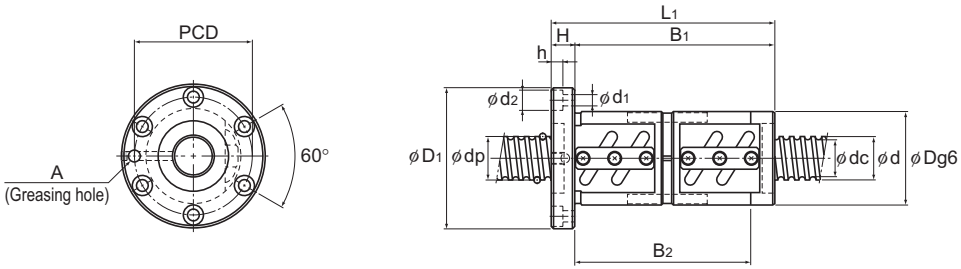

BNFN

Ball Screw

Unit: mm

	Nut dimensions										Screw shaft inertial moment/mm	Nut mass	Shaft mass
	Outer diameter D	Flange diameter D_1	Overall length L_1	H	B_1	B_2	PCD	$d_1 \times d_2 \times h$	Tw	Greasing hole A	kg・cm²/mm	kg	kg/m
	38	63	63	11	52	15	51	5.5×9.5×5.5	39	M6	3.01×10^{-3}	0.43	3.5
	38	63	71	11	60	15	51	5.5×9.5×5.5	39	M6	3.01×10^{-3}	0.47	3.5
	46	69	68	11	57	—	57	5.5×9.5×5.5	—	M6	3.01×10^{-3}	0.69	3.5
	46	69	92	11	81	—	57	5.5×9.5×5.5	—	M6	3.01×10^{-3}	0.88	3.5
	40	63	61	11	50	10	51	5.5×9.5×5.5	41	M6	3.01×10^{-3}	0.47	3.35
	50	73	52	11	41	—	61	5.5×9.5×5.5	—	M6	3.01×10^{-3}	0.7	3.35
	50	73	55	11	44	—	61	5.5×9.5×5.5	—	M6	3.01×10^{-3}	0.75	3.35
	50	73	75	11	64	52	61	5.5×9.5×5.5	—	M6	3.01×10^{-3}	0.92	3.35
	50	73	102	11	91	79	61	5.5×9.5×5.5	—	M6	3.01×10^{-3}	1.19	3.35
	50	73	85	11	74	62	61	5.5×9.5×5.5	—	M6	3.01×10^{-3}	1.02	3.35
	50	73	105	11	94	82	61	5.5×9.5×5.5	—	M6	3.01×10^{-3}	1.22	3.35
	40	63	60	11	49	10	51	5.5×9.5×5.5	41	M6	3.01×10^{-3}	0.46	3.19
	40	63	72	11	61	15	51	5.5×9.5×5.5	41	M6	3.01×10^{-3}	0.54	3.19

For model number coding, see B15-164.

Preload Type of Precision Ball Screw

Screw shaft outer diameter	25
Lead	6 to 25

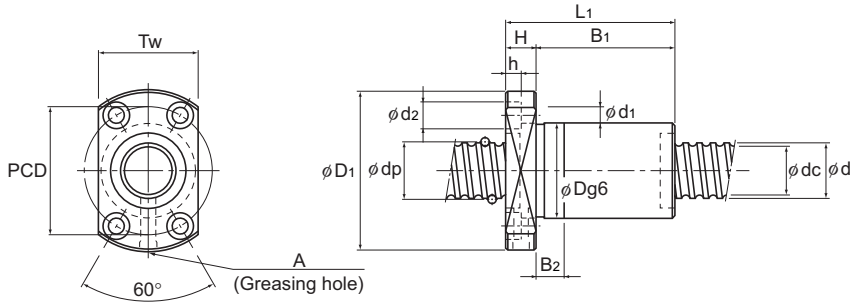

DIK (1404 to 2510)

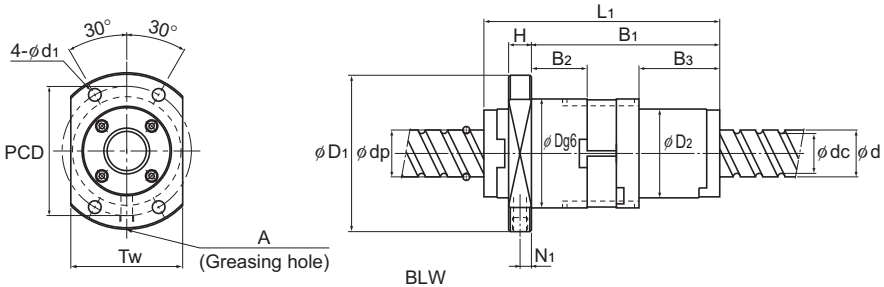

BLW

Screw shaft outer diameter d	Lead Ph	Model No.	Ball center-to-center diameter dp	Thread minor diameter dc	No. of loaded circuits Rows x turns	Basic load rating Ca kN	Basic load rating C_0a kN	Rigidity K N/μm	Outer diameter D	Flange diameter D_1	D_2
25	6	○ BNFN 2506-2.5	26	21.4	1×2.5	12.5	27.3	490	53	76	—
		○ BNFN 2506-3	26	21.4	2×1.5	14.6	32.8	580	53	76	—
		○ BNFN 2506-3.5	26	21.4	1×3.5	15.1	35.9	670	53	76	—
		○ BNFN 2506-5	26	21.4	2×2.5	22.5	54.8	940	53	76	—
	8	DIK 2508-4	26	21.4	2×1	9.2	18.8	340	40	63	—
		DIK 2508-6	26	21.4	3×1	13.1	28.1	500	40	63	—
		○ BIF 2508-5	26.25	20.5	1×2.5	15.8	32.8	500	58	85	—
		○ BNFN 2508-2.5	26.25	20.5	1×2.5	15.8	32.8	500	58	85	—
		○ BNFN 2508-3	26.25	20.5	2×1.5	18.5	39.4	600	58	85	—
		○ BNFN 2508-3.5	26.25	20.5	1×3.5	21.2	46	690	58	85	—
		○ BNFN 2508-5	26.25	20.5	2×2.5	28.7	65.8	970	58	85	—
	10	DIK 2510-4	26	21.6	2×1	9	18	330	40	63	—
		○ BIF 2510A-5	26.3	21.4	1×2.5	15.8	33	500	58	85	—
		○ BNFN 2510A-2.5	26.3	21.4	1×2.5	15.8	33	500	58	85	—
	12	○ BNFN 2512-2.5	26	21.9	1×2.5	12.3	27.6	490	53	76	—
	16	○ BNFN 2516-1.5	26	21.4	1×1.5	7.9	16.7	300	53	76	—
	25	BLW 2525-3.6	26	21.9	2×1.8	16.6	38.7	700	57	82	47

Note) The model numbers in dimmed type indicate semi-standard types. If desiring them, contact THK.
Those models marked with ○ can be attached with QZ Lubricator or the wiper ring.
For dimensions of the ball screw nut with either accessory being attached, see B15-228. Model BLW cannot be attached with seal.

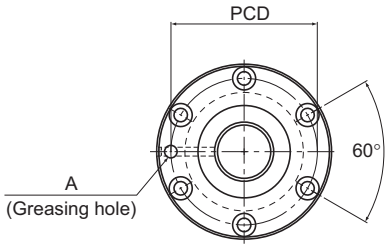

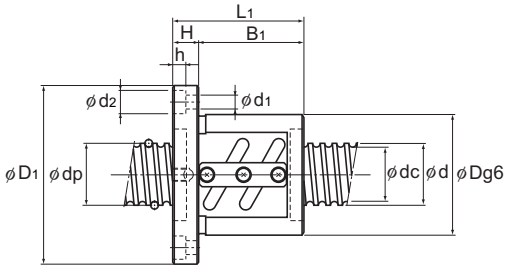

BIF

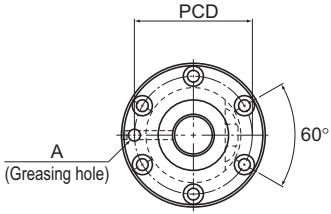

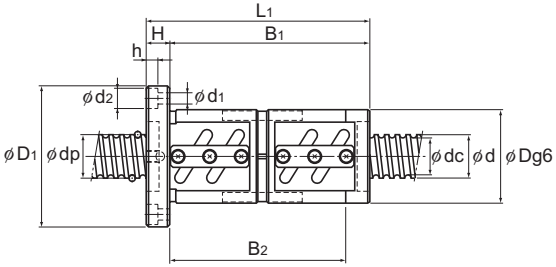

BNFN

Unit: mm

Nut dimensions												Screw shaft inertial moment/mm	Nut mass	Shaft mass
Overall length L_1	H	B_1	B_2	B_3	PCD	d_1	d_2	h	Tw	N_1	Greasing hole A	kg・cm²/mm	kg	kg/m
86	11	75	—	—	64	5.5	9.5	5.5	—	—	M6	3.01×10^{-3}	1.19	3.19
110	11	99	—	—	64	5.5	9.5	5.5	—	—	M6	3.01×10^{-3}	1.47	3.19
98	11	87	—	—	64	5.5	9.5	5.5	—	—	M6	3.01×10^{-3}	1.33	3.19
122	11	111	—	—	64	5.5	9.5	5.5	—	—	M6	3.01×10^{-3}	1.61	3.19
71	12	59	15	—	51	5.5	9.5	5.5	41	—	M6	3.01×10^{-3}	0.54	3.35
94	12	82	25	—	51	5.5	9.5	5.5	41	—	M6	3.01×10^{-3}	0.68	3.35
82	15	67	—	—	71	6.6	11	6.5	—	—	M6	3.01×10^{-3}	1.52	3.13
106	15	91	—	—	71	6.6	11	6.5	—	—	M6	3.01×10^{-3}	1.89	3.13
135	15	120	—	—	71	6.6	11	6.5	—	—	M6	3.01×10^{-3}	2.32	3.13
122	15	107	—	—	71	6.6	11	6.5	—	—	M6	3.01×10^{-3}	2.12	3.13
154	15	139	—	—	71	6.6	11	6.5	—	—	M6	3.01×10^{-3}	2.6	3.13
85	15	70	20	—	51	5.5	9.5	5.5	41	—	M6	3.01×10^{-3}	0.65	3.45
100	18	82	—	—	71	6.6	11	6.5	—	—	M6	3.01×10^{-3}	1.86	3.27
120	18	102	83	—	71	6.6	11	6.5	—	—	M6	3.01×10^{-3}	2.16	3.27
108	11	97	—	—	64	5.5	9.5	5.5	—	—	M6	3.01×10^{-3}	1.44	3.52
108	11	97	—	—	64	5.5	9.5	5.5	—	—	M6	3.01×10^{-3}	1.44	3.6
124.5	12	101.5	33	44	68	6.6	—	—	60	5	M6	3.01×10^{-3}	0.94	3.52

For model number coding, see B15-164.

Preload Type of Precision Ball Screw

Screw shaft outer diameter	28
Lead	5 to 10

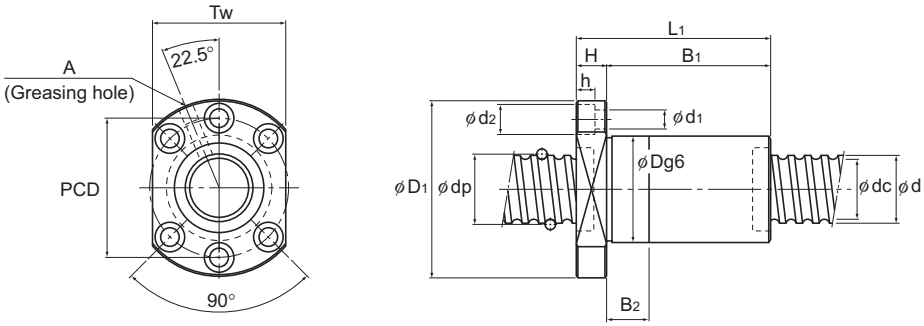

DIK (2805 to 6312)

Screw shaft outer diameter d	Lead Ph	Model No.	Ball center-to-center diameter dp	Thread minor diameter dc	No. of loaded circuits Rows x turns	Basic load rating Ca kN	Basic load rating C_0a kN	Rigidity K N/μm
28	5	BIF 2805-5	28.75	25.2	1×2.5	9.7	24.6	520
		BIF 2805-10	28.75	25.2	2×2.5	17.4	49.4	1000
		DIK 2805-6	28.75	25.2	3×1	10.5	26.4	560
		DIK 2805-8	28.75	25.2	4×1	13.4	35.2	730
		BNFN 2805-2.5	28.75	25.2	1×2.5	9.7	24.6	520
		BNFN 2805-3	28.75	25.2	2×1.5	11.3	29.5	620
		BNFN 2805-3.5	28.75	25.2	1×3.5	12.9	34.4	720
		BNFN 2805-5	28.75	25.2	2×2.5	17.5	49.4	1000
		BNFN 2805-7.5	28.75	25.2	3×2.5	24.8	73.8	1470
	6	BIF 2806-5	28.75	25.2	1×2.5	9.6	24.6	520
		BIF 2806-10	28.75	25.2	2×2.5	17.5	49.4	1000
		DIK 2806-6	29	24.4	3×1	14	32	530
		BNFN 2806-2.5	28.75	25.2	1×2.5	9.6	24.6	520
		BNFN 2806-3.5	28.75	25.2	1×3.5	12.9	34.5	710
		BNFN 2806-5	28.75	25.2	2×2.5	17.5	49.4	1000
		BNFN 2806-7.5	28.75	25.2	3×2.5	24.8	73.8	1470
	8	BNFN 2808-2.5	29.25	23.6	1×2.5	16.8	36.8	550
		BNFN 2808-3	29.25	23.6	2×1.5	19.6	44.2	660
		BNFN 2808-5	29.25	23.6	2×2.5	30.4	73.7	1060
	10	BIF 2810-3	29.75	22.4	1×1.5	15.7	29.4	350
		DIK 2810-4	29.25	23.6	2×1	12.3	25	380
		BNFN 2810-2.5	29.75	22.4	1×2.5	24	48.2	560

Note) The model numbers in dimmed type indicate semi-standard types.
If desiring them, contact THK.

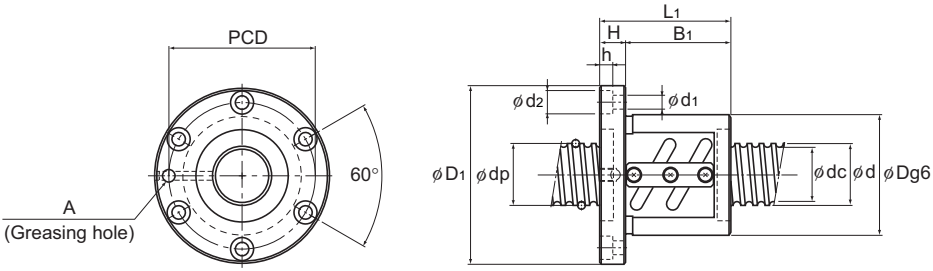

BIF

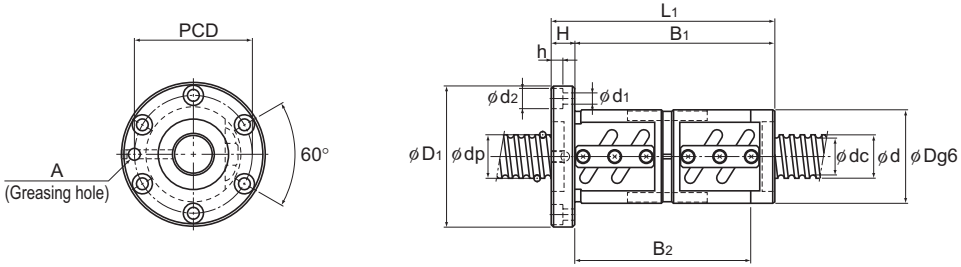

BNFN

Unit: mm

	Nut dimensions										Screw shaft inertial moment/mm	Nut mass	Shaft mass
	Outer diameter D	Flange diameter D_1	Overall length L_1	H	B_1	B_2	PCD	$d_1 \times d_2 \times h$	Tw	Greasing hole A	kg・cm²/mm	kg	kg/m
	55	85	59	12	47	—	69	6.6×11×6.5	—	M6	4.74×10^{-3}	0.98	4.27
	55	85	89	12	77	—	69	6.6×11×6.5	—	M6	4.74×10^{-3}	1.34	4.27
	43	71	69	12	57	15	57	6.6×11×6.5	55	M6	4.74×10^{-3}	0.61	4.27
	43	71	79	12	67	20	57	6.6×11×6.5	55	M6	4.74×10^{-3}	0.68	4.27
	55	85	74	12	62	49	69	6.6×11×6.5	—	M6	4.74×10^{-3}	1.16	4.27
	55	85	94	12	82	69	69	6.6×11×6.5	—	M6	4.74×10^{-3}	1.4	4.27
	55	85	84	12	72	59	69	6.6×11×6.5	—	M6	4.74×10^{-3}	1.28	4.27
	55	85	104	12	92	79	69	6.6×11×6.5	—	M6	4.74×10^{-3}	1.52	4.27
	55	85	134	12	122	109	69	6.6×11×6.5	—	M6	4.74×10^{-3}	1.88	4.27
	55	85	68	12	56	—	69	6.6×11×6.5	—	M6	4.74×10^{-3}	1.09	4.36
	55	85	104	12	92	—	69	6.6×11×6.5	—	M6	4.74×10^{-3}	1.52	4.36
	43	71	73	12	61	15	57	6.6×11×6.5	55	M6	4.74×10^{-3}	0.64	4.36
	55	85	86	12	74	61	69	6.6×11×6.5	—	M6	4.74×10^{-3}	1.3	4.36
	55	85	98	12	86	73	69	6.6×11×6.5	—	M6	4.74×10^{-3}	1.45	4.36
	55	85	122	12	110	97	69	6.6×11×6.5	—	M6	4.74×10^{-3}	1.73	4.36
	55	85	158	12	146	133	69	6.6×11×6.5	—	M6	4.74×10^{-3}	2.16	4.36
	60	104	116	18	98	—	82	11×17.5×11	—	M6	4.74×10^{-3}	2.47	4.02
	60	104	144	18	126	—	82	11×17.5×11	—	M6	4.74×10^{-3}	2.9	4.02
	60	104	164	18	146	—	82	11×17.5×11	—	M6	4.74×10^{-3}	3.2	4.02
	65	106	88	18	70	—	85	11×17.5×11	—	M6	4.74×10^{-3}	2.33	3.66
	45	71	84	15	69	20	57	6.6×11×6.5	55	M6	4.74×10^{-3}	0.82	4.18
	65	106	146	18	128	—	85	11×17.5×11	—	M6	4.74×10^{-3}	3.41	3.66

For model number coding, see B15-164.

Preload Type of Precision Ball Screw

Screw shaft outer diameter	32
Lead	4 to 6

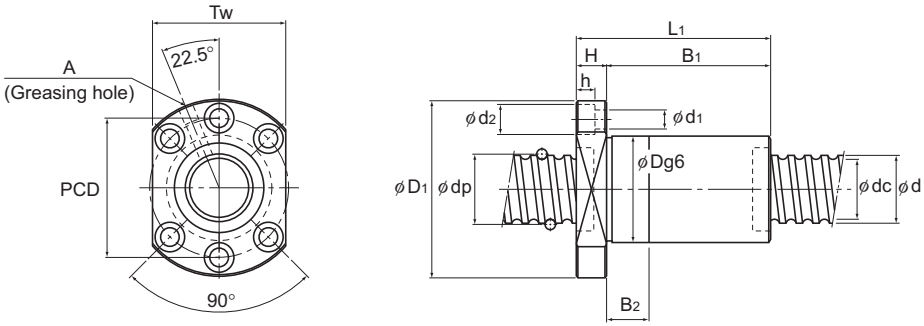

DIK (2805 to 6312)

Screw shaft outer diameter d	Lead Ph	Model No.	Ball center-to-center diameter dp	Thread minor diameter dc	No. of loaded circuits Rows x turns	Basic load rating Ca kN	Basic load rating C_0a kN	Rigidity K N/μm
32	4	BIF 3204-10	32.5	30.1	2×2.5	10.5	35.4	1010
		DIK 3204-6	32.5	30.1	3×1	6.4	19.6	580
		DIK 3204-8	32.5	30.1	4×1	8.2	26.1	760
		DIK 3204-10	32.5	30.1	5×1	10	32.7	940
	5	DIK 3205-6	32.75	29.2	3×1	11.1	30.2	620
		DIK 3205-8	32.75	29.2	4×1	14.2	40.3	810
		○ BIF 3205-5	32.75	29.2	1×2.5	10.2	28.1	570
		○ BIF 3205-10	32.75	29.2	2×2.5	18.5	56.4	1110
		○ BNFN 3205-2.5	32.75	29.2	1×2.5	10.2	28.1	570
		○ BNFN 3205-3	32.75	29.2	2×1.5	12	33.8	690
		○ BNFN 3205-4.5	32.75	29.2	3×1.5	17	50.7	1000
		○ BNFN 3205-5	32.75	29.2	2×2.5	18.5	56.4	1110
		○ BNFN 3205-7.5	32.75	29.2	3×2.5	26.3	84.5	1640
	6	DIK 3206-6	33	28.4	3×1	14.9	37.1	630
		DIK 3206-8	33	28.4	4×1	19.1	49.5	820
		○ BIF 3206-5	33	28.4	1×2.5	13.9	35.2	600
		○ BIF 3206-7	33	28.4	1×3.5	18.5	49.2	810
		○ BIF 3206-10	33	28.4	2×2.5	25.2	70.4	1150
		○ BNFN 3206-2.5	33	28.4	1×2.5	13.9	35.2	600
		○ BNFN 3206-3	33	28.4	2×1.5	16.3	42.2	710
		○ BNFN 3206-5	33	28.4	2×2.5	25.2	70.4	1150

Note) The model numbers in dimmed type indicate semi-standard types. If desiring them, contact THK.
Those models marked with ○ can be attached with QZ Lubricator or the wiper ring.
For dimensions of the ball screw nut with either accessory being attached, see B15-228.

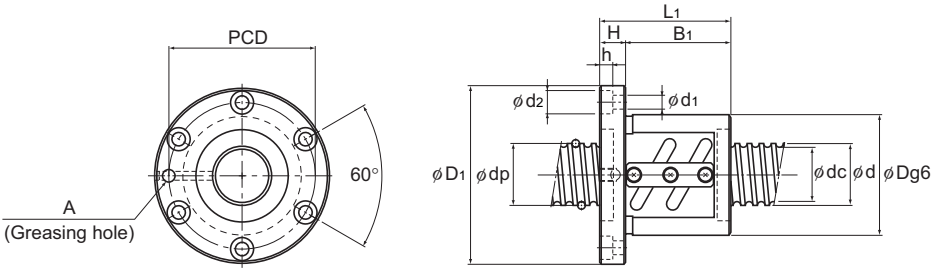

BIF

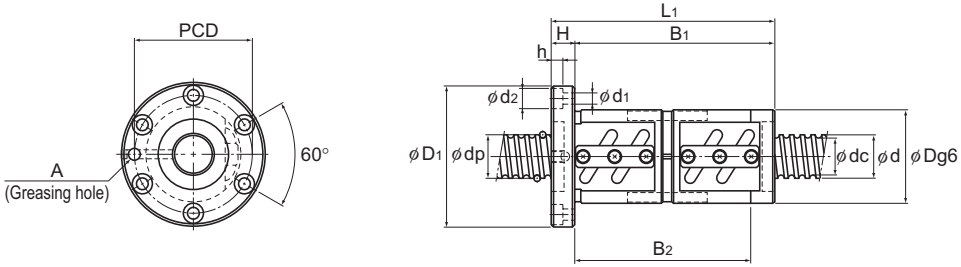

BNFN

Unit: mm

	Nut dimensions										Screw shaft inertial moment/mm	Nut mass	Shaft mass
	Outer diameter D	Flange diameter D_1	Overall length L_1	H	B_1	B_2	PCD	$d_1 \times d_2 \times h$	Tw	Greasing hole A	kg・cm²/mm	kg	kg/m
	54	81	76	11	65	—	67	6.6×11×6.5	—	M6	8.08×10^{-3}	0.97	5.86
	45	76	64	11	53	15	63	6.6×11×6.5	59	M6	8.08×10^{-3}	0.57	5.86
	45	76	72	11	61	15	63	6.6×11×6.5	59	M6	8.08×10^{-3}	0.62	5.86
	45	76	80	11	69	20	63	6.6×11×6.5	59	M6	8.08×10^{-3}	0.66	5.86
	46	76	62	12	50	10	63	6.6×11×6.5	59	M6	8.08×10^{-3}	0.60	5.67
	46	76	73	12	61	15	63	6.6×11×6.5	59	M6	8.08×10^{-3}	0.67	5.67
	58	85	56	12	44	—	71	6.6×11×6.5	—	M6	8.08×10^{-3}	0.94	5.67
	58	85	86	12	74	—	71	6.6×11×6.5	—	M6	8.08×10^{-3}	1.31	5.67
	58	85	76	12	64	51	71	6.6×11×6.5	—	M6	8.08×10^{-3}	1.19	5.67
	58	85	103	12	91	78	71	6.6×11×6.5	—	M6	8.08×10^{-3}	1.52	5.67
	58	85	123	12	111	98	71	6.6×11×6.5	—	M6	8.08×10^{-3}	1.77	5.67
	58	85	106	12	94	81	71	6.6×11×6.5	—	M6	8.08×10^{-3}	1.56	5.67
	58	85	136	12	124	111	71	6.6×11×6.5	—	M6	8.08×10^{-3}	1.93	5.67
	48	76	73	12	61	15	63	6.6×11×6.5	59	M6	8.08×10^{-3}	0.74	6.31
	48	76	87	12	75	20	63	6.6×11×6.5	59	M6	8.08×10^{-3}	0.85	6.31
	62	89	63	12	51	—	75	6.6×11×6.5	—	M6	8.08×10^{-3}	1.21	6.31
	62	89	75	12	63	—	75	6.6×11×6.5	—	M6	8.08×10^{-3}	1.39	6.31
	62	89	99	12	87	—	75	6.6×11×6.5	—	M6	8.08×10^{-3}	1.75	6.31
	62	89	87	12	75	62	75	6.6×11×6.5	—	M6	8.08×10^{-3}	1.57	6.31
	62	89	111	12	99	86	75	6.6×11×6.5	—	M6	8.08×10^{-3}	1.93	6.31
	62	89	123	12	111	98	75	6.6×11×6.5	—	M6	8.08×10^{-3}	2.11	6.31

For model number coding, see B15-164.

Preload Type of Precision Ball Screw

Screw shaft outer diameter	32
Lead	8 to 32

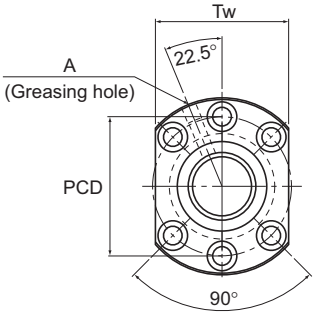

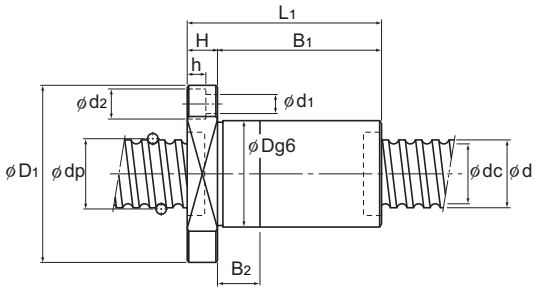

DIK (2805 to 6312)

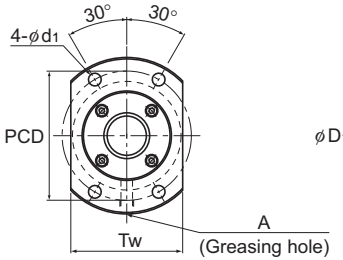

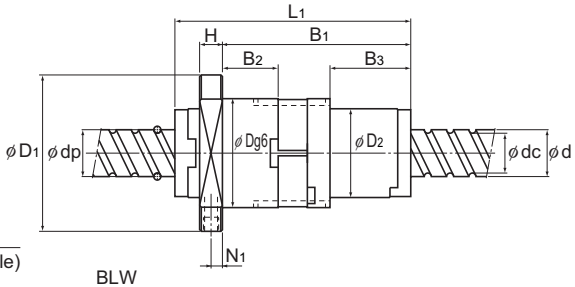

BLW

Screw shaft outer diameter d	Lead Ph	Model No.	Ball center-to-center diameter dp	Thread minor diameter dc	No. of loaded circuits Rows x turns	Basic load rating Ca kN	Basic load rating C_0a kN	Rigidity K N/μm	Outer diameter D	Flange diameter D_1	D_2
32	8	○ BIF 3208A-5	33.25	27.5	1×2.5	17.8	42.2	610	66	100	—
		○ BIF 3208A-7	33.25	27.5	1×3.5	23.8	59.1	840	66	100	—
		○ BNFN 3208A-2.5	33.25	27.5	1×2.5	17.8	42.2	610	66	100	—
		○ BNFN 3208A-3	33.25	27.5	2×1.5	20.9	50.7	730	66	100	—
		○ BNFN 3208A-4.5	33.25	27.5	3×1.5	29.5	76	1070	66	100	—
		○ BNFN 3208A-5	33.25	27.5	2×2.5	32.3	84.4	1180	66	100	—
	10	DIK 3210-6	33.75	26.4	3×1	25.7	52.2	600	54	87	—
		○ BIF 3210A-5	33.75	26.4	1×2.5	26.1	56.2	640	74	108	—
		○ BNFN 3210A-2.5	33.75	26.4	1×2.5	26.1	56.2	640	74	108	—
		○ BNFN 3210A-3	33.75	26.4	2×1.5	30.5	67.4	750	74	108	—
		○ BNFN 3210A-3.5	33.75	26.4	1×3.5	34.8	78.6	870	74	108	—
		○ BNFN 3210A-5	33.75	26.4	2×2.5	47.2	112.7	1230	74	108	—
	12	DIK 3212-4	33.75	26.4	2×1	18.8	37	430	54	87	—
		○ BNFN 3212-3.5	34	26.1	1×3.5	40.4	88.5	890	76	121	—
	32	BLW 3232-3.6	33.25	28.3	2×1.8	23.7	59.5	880	68	99	58

Note) The model numbers in dimmed type indicate semi-standard types. If desiring them, contact THK.
Those models marked with ○ can be attached with QZ Lubricator or the wiper ring.
For dimensions of the ball screw nut with either accessory being attached, see B15-228.
Model BLW cannot be attached with seal.

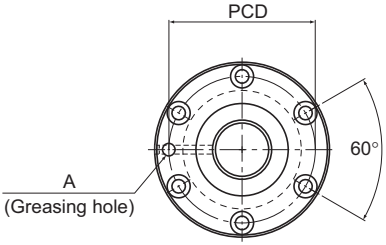

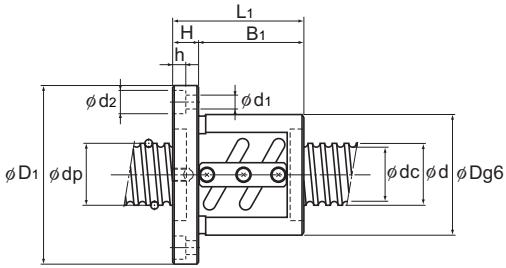

BIF

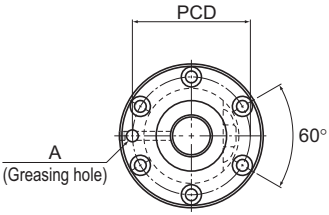

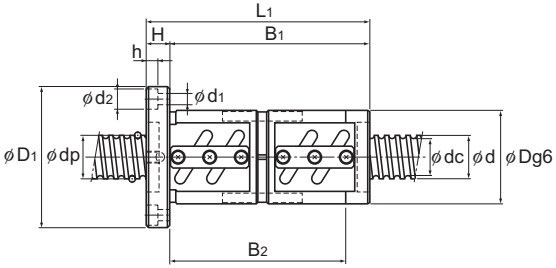

BNFN

Unit: mm

Nut dimensions												Screw shaft inertial moment/mm	Nut mass	Shaft mass
Overall length L_1	H	B_1	B_2	B_3	PCD	d_1	d_2	h	Tw	N_1	Greasing hole A	kg・cm²/mm	kg	kg/m
82	15	67	—	—	82	9	14	8.5	—	—	M6	8.08×10^{-3}	1.93	5.39
98	15	83	—	—	82	9	14	8.5	—	—	M6	8.08×10^{-3}	2.21	5.39
106	15	91	—	—	82	9	14	8.5	—	—	M6	8.08×10^{-3}	2.36	5.39
135	15	120	—	—	82	9	14	8.5	—	—	M6	8.08×10^{-3}	2.88	5.39
167	15	152	—	—	82	9	14	8.5	—	—	M6	8.08×10^{-3}	3.45	5.39
154	15	139	—	—	82	9	14	8.5	—	—	M6	8.08×10^{-3}	3.21	5.39
110	15	95	25	—	69	9	14	8.5	66	—	M6	8.08×10^{-3}	1.57	4.98
100	15	85	—	—	90	9	14	8.5	—	—	M6	8.08×10^{-3}	2.92	4.98
130	15	115	99	—	90	9	14	8.5	—	—	M6	8.08×10^{-3}	3.64	4.98
167	15	152	136	—	90	9	14	8.5	—	—	M6	8.08×10^{-3}	4.53	4.98
150	15	135	119	—	90	9	14	8.5	—	—	M6	8.08×10^{-3}	4.12	4.98
190	15	175	159	—	90	9	14	8.5	—	—	M6	8.08×10^{-3}	5.08	4.98
98	15	83	25	—	69	9	14	8.5	66	—	M6	8.08×10^{-3}	1.43	5.2
170	18	152	—	—	98	11	17.5	11	—	—	M6	8.08×10^{-3}	5.26	4.9
155	15	127	42.4	55.4	81	9	—	—	70	6	M6	8.08×10^{-3}	3.19	5.83

For model number coding, see B15-164.

Preload Type of Precision Ball Screw

Screw shaft outer diameter	36
Lead	6 to 36

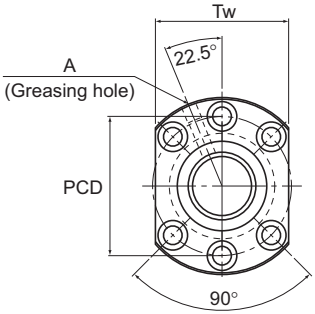

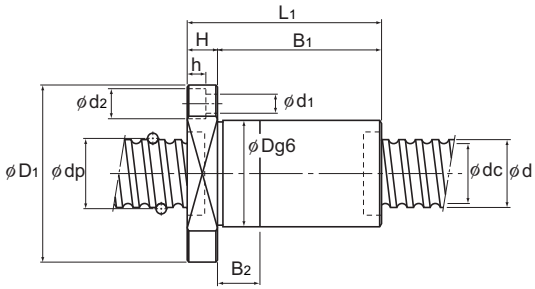

DIK (2805 to 6312)

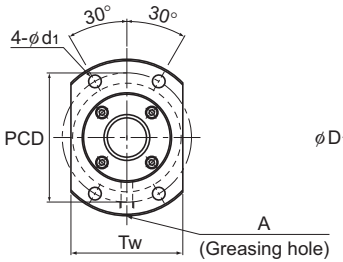

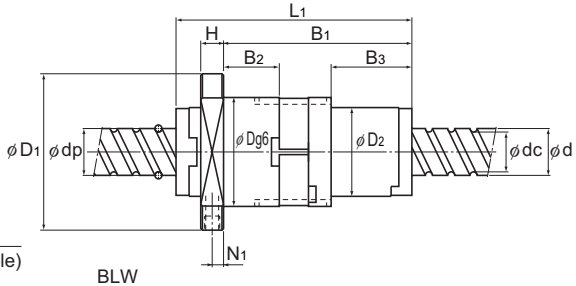

BLW

Screw shaft outer diameter d	Lead Ph	Model No.	Ball center-to-center diameter dp	Thread minor diameter dc	No. of loaded circuits Rows x turns	Basic load rating Ca kN	Basic load rating C_0a kN	Rigidity K N/μm	Outer diameter D	Flange diameter D_1	D_2
36	6	○ BNFN 3606-2.5	36.75	33.2	1×2.5	10.7	31.8	630	65	100	—
		○ BNFN 3606-3	36.75	33.2	2×1.5	12.5	38	740	65	100	—
		○ BNFN 3606-5	36.75	33.2	2×2.5	19.4	63.4	1220	65	100	—
		○ BNFN 3606-7.5	36.75	33.2	3×2.5	27.5	95.2	1790	65	100	—
	8	○ BNFN 3608-2.5	37.25	31.6	1×2.5	18.8	47.5	670	70	114	—
		○ BNFN 3608-5	37.25	31.6	2×2.5	34.1	95.1	1290	70	114	—
		○ BNFN 3608-7.5	37.25	31.6	3×2.5	48.3	142.1	1910	70	114	—
	10	DIK 3610-6	37.75	30.5	3×1	28.8	63.8	710	58	98	—
		DIK 3610-8	37.75	30.5	4×1	36.8	85	940	58	98	—
		DIK 3610-10	37.75	30.5	5×1	44.6	106.3	1160	58	98	—
		○ BIF 3610-5	37.75	30.5	1×2.5	27.6	63.3	700	75	120	—
		○ BIF 3610-10	37.75	30.5	2×2.5	50.1	126.4	1350	75	120	—
		○ BNFN 3610-2.5	37.75	30.5	1×2.5	27.6	63.3	700	75	120	—
		○ BNFN 3610-5	37.75	30.5	2×2.5	50.1	126.4	1350	75	120	—
		○ BNFN 3610-7.5	37.75	30.5	3×2.5	71.1	190.1	1990	75	120	—
	12	○ BNFN 3612-2.5	38	30.1	1×2.5	32.1	71.4	720	78	123	—
		○ BNFN 3612-5	38	30.1	2×2.5	58.4	142.1	1370	78	123	—
	16	○ BNFN 3616-2.5	38	30.1	1×2.5	32.1	71.4	720	78	123	—
		○ BNFN 3616-5	38	30.1	2×2.5	58.3	143.1	1380	78	123	—
	20	○ BNFN 3620-1.5	37.75	30.5	1×1.5	17.6	38.3	430	70	103	—
	36	BLW 3636-3.6	37.4	31.7	2×1.8	30.8	78	980	79	116	66

Note) The model numbers in dimmed type indicate semi-standard types. If desiring them, contact THK.
Those models marked with ○ can be attached with QZ Lubricator or the wiper ring.
For dimensions of the ball screw nut with either accessory being attached, see B15-228. Model BLW cannot be attached with seal.

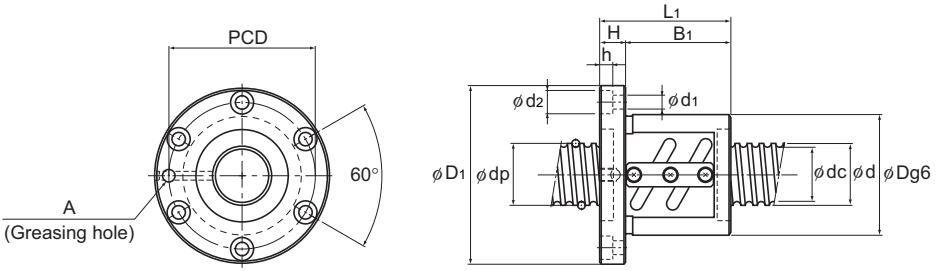

BIF

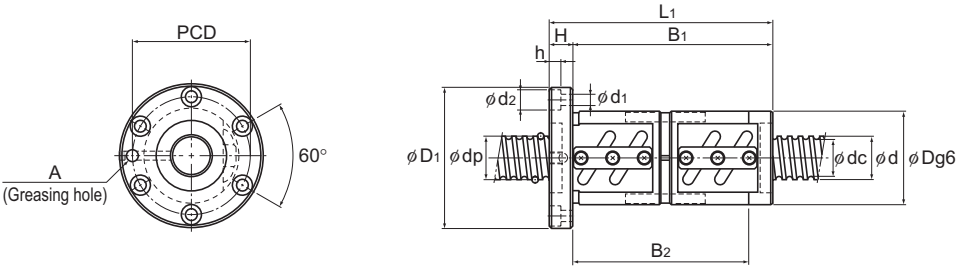

BNFN

Unit: mm

Nut dimensions												Screw shaft inertial moment/mm	Nut mass	Shaft mass
Overall length L_1	H	B_1	B_2	B_3	PCD	d_1	d_2	h	Tw	N_1	Greasing hole A	kg・cm²/mm	kg	kg/m
89	15	74	58	—	82	9	14	8.5	—	—	M6	1.29×10^{-2}	1.85	7.39
110	15	95	79	—	82	9	14	8.5	—	—	M6	1.29×10^{-2}	2.18	7.39
125	15	110	94	—	82	9	14	8.5	—	—	M6	1.29×10^{-2}	2.41	7.39
161	15	146	130	—	82	9	14	8.5	—	—	M6	1.29×10^{-2}	2.96	7.39
116	18	98	—	—	92	11	17.5	11	—	—	M6	1.29×10^{-2}	3.03	6.96
164	18	146	—	—	92	11	17.5	11	—	—	M6	1.29×10^{-2}	3.95	6.96
212	18	194	—	—	92	11	17.5	11	—	—	M6	1.29×10^{-2}	4.87	6.96
122	18	104	30	—	77	11	17.5	11	75	—	M6	1.29×10^{-2}	2.03	6.51
143	18	125	35	—	77	11	17.5	11	75	—	M6	1.29×10^{-2}	2.3	6.51
164	18	146	45	—	77	11	17.5	11	75	—	M6	1.29×10^{-2}	2.57	6.51
111	18	93	—	—	98	11	17.5	11	—	—	M6	1.29×10^{-2}	3.45	6.51
171	18	153	—	—	98	11	17.5	11	—	—	M6	1.29×10^{-2}	4.84	6.51
141	18	123	104	—	98	11	17.5	11	—	—	M6	1.29×10^{-2}	4.15	6.51
201	18	183	164	—	98	11	17.5	11	—	—	M6	1.29×10^{-2}	5.54	6.51
261	18	243	224	—	98	11	17.5	11	—	—	M6	1.29×10^{-2}	6.93	6.51
147	18	129	—	—	100	11	17.5	11	—	—	M6	1.29×10^{-2}	4.69	6.41
219	18	201	—	—	100	11	17.5	11	—	—	M6	1.29×10^{-2}	6.54	6.41
172	18	154	—	—	100	11	17.5	11	—	—	M6	1.29×10^{-2}	5.33	6.8
268	18	250	—	—	100	11	17.5	11	—	—	M6	1.29×10^{-2}	7.8	6.8
135	15	120	—	—	85	9	14	8.5	—	—	M6	1.29×10^{-2}	3.06	7.24
181	17	147.9	49.4	65.4	95	11	—	—	82	7	M6	1.29×10^{-2}	5.99	7.34

For model number coding, see B15-164.

Preload Type of Precision Ball Screw

Screw shaft outer diameter	40
Lead	5 to 10

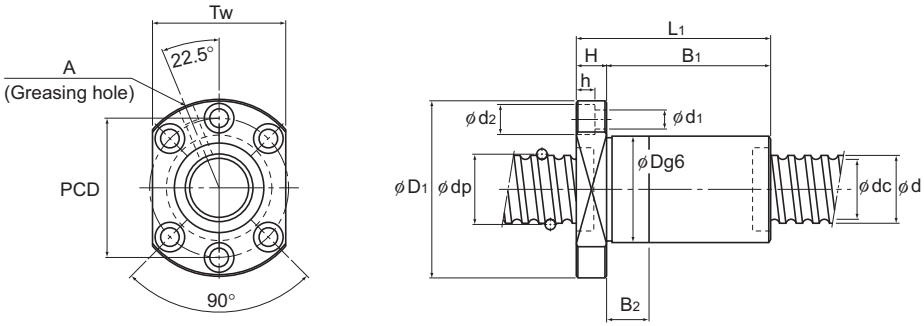

DIK (2805 to 6312)

Screw shaft outer diameter d	Lead Ph	Model No.	Ball center-to-center diameter dp	Thread minor diameter dc	No. of loaded circuits Rows x turns	Basic load rating Ca kN	Basic load rating C₀a kN	Rigidity K N/μm
40	5	BNFN 4005-3	40.75	37.2	2×1.5	13	42.3	810
		BNFN 4005-4.5	40.75	37.2	3×1.5	18.5	63.5	1200
		BNFN 4005-5	40.75	37.2	2×2.5	20.3	70.6	1320
		BNFN 4005-6	40.75	37.2	4×1.5	23.7	84.7	1580
	6	BNFN 4006-2.5	41	36.4	1×2.5	15.3	44.1	710
		BNFN 4006-5	41	36.4	2×2.5	27.7	88.1	1360
		BNFN 4006-7.5	41	36.4	3×2.5	39.2	132.3	2010
	8	BNFN 4008-2.5	41.25	35.5	1×2.5	19.6	52.8	730
		BNFN 4008-3	41.25	35.5	2×1.5	22.9	63.4	860
		BNFN 4008-5	41.25	35.5	2×2.5	35.7	105.8	1410
	10	BIF 4010-5	41.75	34.4	1×2.5	29	70.4	750
		BIF 4010-10	41.75	34.4	2×2.5	52.7	141.1	1470
		DIK 4010-6	41.75	34.7	3×1	29.8	69.3	750
		DIK 4010-8	41.75	34.7	4×1	38.1	92.4	1000
		BNFN 4010-2.5	41.75	34.4	1×2.5	29	70.4	750
		BNFN 4010-3	41.75	34.4	2×1.5	33.8	84.5	900
		BNFN 4010-3.5	41.75	34.4	1×3.5	38.8	99	1050
		BNFN 4010-5	41.75	34.4	2×2.5	52.7	141.1	1470

Note) The model numbers in dimmed type indicate semi-standard types. If desiring them, contact THK.
These models can be attached with QZ Lubricator or the wiper ring.
For dimensions of the ball screw nut with either accessory being attached, see B15-228.

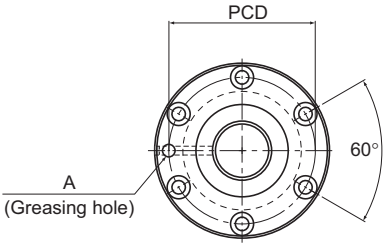

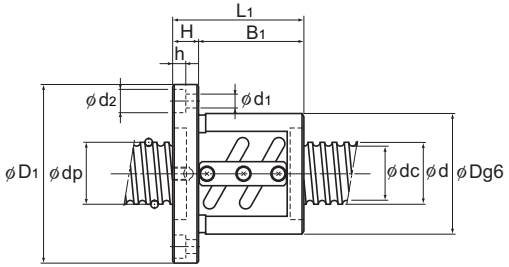

BIF

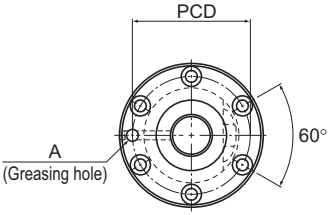

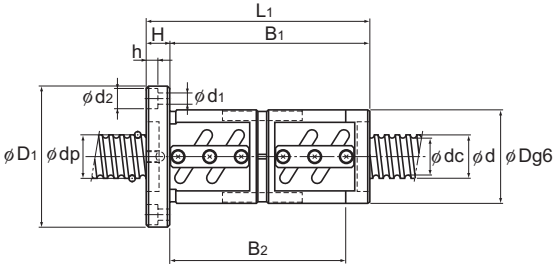

BNFN

Unit: mm

	Nut dimensions										Screw shaft inertial moment/mm	Nut mass	Shaft mass
	Outer diameter D	Flange diameter D_1	Overall length L_1	H	B_1	B_2	PCD	$d_1 \times d_2 \times h$	Tw	Greasing hole A	kg・cm²/mm	kg	kg/m
	67	101	106	15	91	—	83	9×14×8.5	—	M6	1.97×10^{-2}	2.07	9.06
	67	101	126	15	111	—	83	9×14×8.5	—	M6	1.97×10^{-2}	2.37	9.06
	67	101	109	15	94	—	83	9×14×8.5	—	M6	1.97×10^{-2}	2.11	9.06
	67	101	156	15	141	—	83	9×14×8.5	—	M6	1.97×10^{-2}	2.82	9.06
	70	104	90	15	75	—	86	9×14×8.5	—	M6	1.97×10^{-2}	2.05	8.82
	70	104	126	15	111	—	86	9×14×8.5	—	M6	1.97×10^{-2}	2.67	8.82
	70	104	162	15	147	—	86	9×14×8.5	—	M6	1.97×10^{-2}	3.29	8.82
	74	108	106	15	91	—	90	9×14×8.5	—	M6	1.97×10^{-2}	2.69	8.72
	74	108	135	15	120	—	90	9×14×8.5	—	M6	1.97×10^{-2}	3.28	8.72
	74	108	154	15	139	—	90	9×14×8.5	—	M6	1.97×10^{-2}	3.67	8.72
	82	124	103	18	85	—	102	11×17.5×11	—	M6	1.97×10^{-2}	3.69	8.22
	82	124	163	18	145	—	102	11×17.5×11	—	M6	1.97×10^{-2}	5.33	8.22
	62	104	113	18	95	25	82	11×17.5×11	79	PT 1/8	1.97×10^{-2}	2.09	8.22
	62	104	137	18	119	35	82	11×17.5×11	79	PT 1/8	1.97×10^{-2}	2.42	8.22
	82	124	133	18	115	96	102	11×17.5×11	—	M6	1.97×10^{-2}	4.51	8.22
	82	124	170	18	152	133	102	11×17.5×11	—	M6	1.97×10^{-2}	5.52	8.22
	82	124	153	18	135	116	102	11×17.5×11	—	M6	1.97×10^{-2}	5.06	8.22
	82	124	193	18	175	156	102	11×17.5×11	—	M6	1.97×10^{-2}	6.16	8.22

For model number coding, see B15-164.

Preload Type of Precision Ball Screw

Screw shaft outer diameter	40
Lead	12 to 40

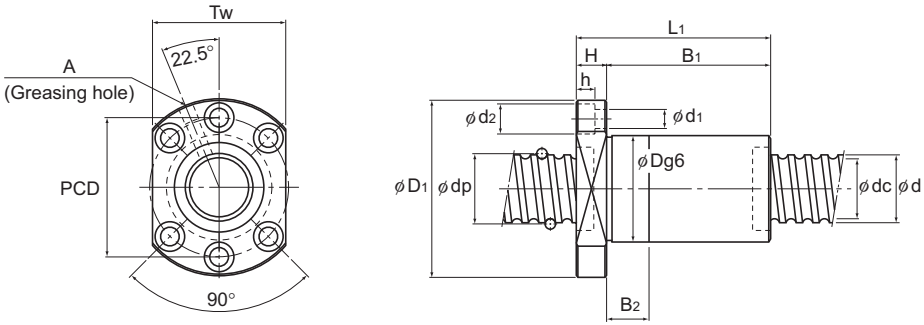

DIK (2805 to 6312)

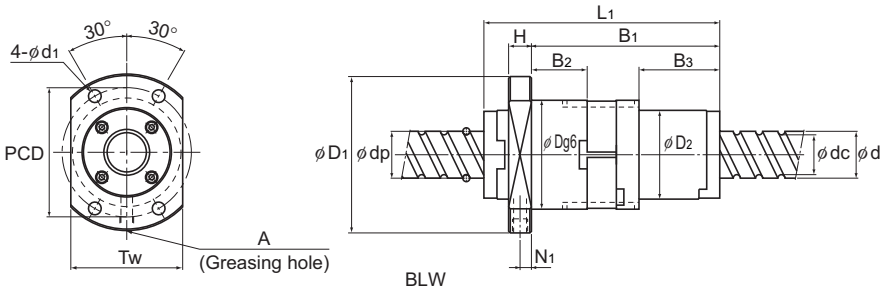

BLW

Screw shaft outer diameter d	Lead Ph	Model No.	Ball center-to-center diameter dp	Thread minor diameter dc	No. of loaded circuits Rows x turns	Basic load rating Ca kN	Basic load rating C_0a kN	Rigidity K N/μm	Outer diameter D	Flange diameter D_1	D_2
40	12	BIF 4012-5	42	34.1	1×2.5	33.9	79.2	770	84	126	—
		BIF 4012-10	42	34.1	2×2.5	61.6	158.8	1490	84	126	—
		DIK 4012-6	41.75	34.4	3×1	30.6	72.3	790	62	104	—
		DIK 4012-8	41.75	34.4	4×1	39.2	96.4	1030	62	104	—
		BNFN 4012-2.5	42	34.1	1×2.5	33.9	79.2	770	84	126	—
		BNFN 4012-3.5	42	34.1	1×3.5	45.4	110.7	1070	84	126	—
		BNFN 4012-5	42	34.1	2×2.5	61.6	158.8	1490	84	126	—
	16	DIK 4016-4	41.75	34.4	2×1	21.5	68.4	540	62	104	—
		BNFN 4016-5	42	34.1	2×2.5	61.4	158.8	1500	84	126	—
	20	DKN 4020-3	41.75	34.7	3×1	29.4	69.3	750	62	104	—
	40	BLW 4040-3.6	41.75	35.2	2×1.8	38.7	99.2	1090	84	121	73

Note) The model numbers in dimmed type indicate semi-standard types. If desiring them, contact THK.
These models can be attached with QZ Lubricator or the wiper ring.
For dimensions of the ball screw nut with either accessory being attached, see B15-228.
Model BLW cannot be attached with seal.

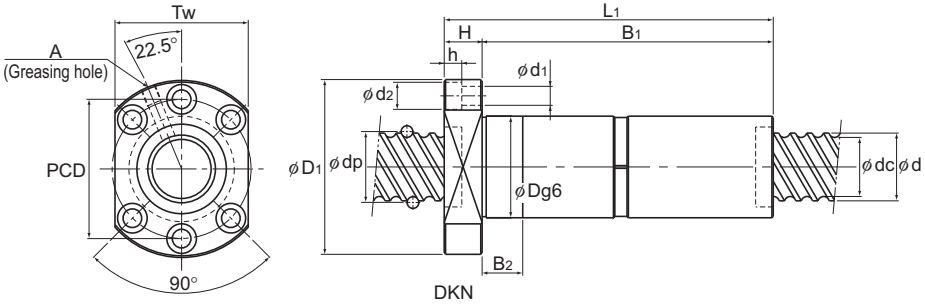

DKN

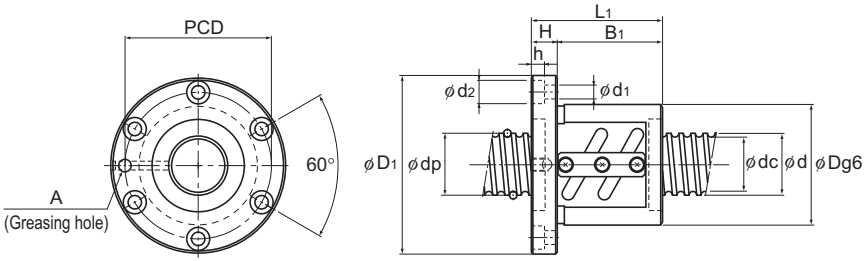

BIF

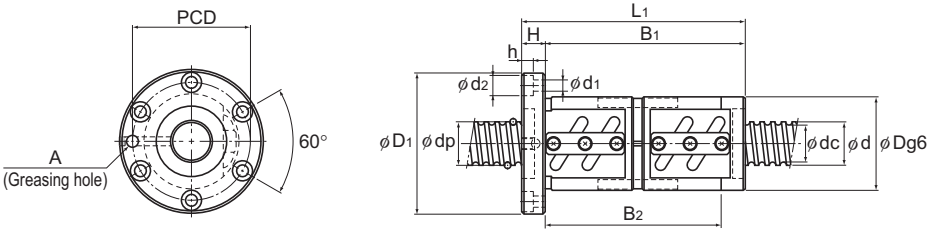

BNFN

Unit: mm

Nut dimensions												Screw shaft inertial moment/mm	Nut mass	Shaft mass
Overall length L_1	H	B_1	B_2	B_3	PCD	d_1	d_2	h	Tw	N_1	Greasing hole A	kg・cm²/mm	kg	kg/m
119	18	101	—	—	104	11	17.5	11	—	—	M6	1.97×10^{-2}	4.36	8.12
191	18	173	—	—	104	11	17.5	11	—	—	M6	1.97×10^{-2}	6.47	8.12
138	18	120	35	—	82	11	17.5	11	79	—	PT 1/8	1.97×10^{-2}	2.44	8.5
163	18	145	45	—	82	11	17.5	11	79	—	PT 1/8	1.97×10^{-2}	2.78	8.5
155	18	137	118	—	104	11	17.5	11	—	—	M6	1.97×10^{-2}	5.42	8.12
179	18	161	142	—	104	11	17.5	11	—	—	M6	1.97×10^{-2}	6.12	8.12
227	18	209	190	—	104	11	17.5	11	—	—	M6	1.97×10^{-2}	7.52	8.12
120	18	102	30	—	82	11	17.5	11	79	—	PT 1/8	1.97×10^{-2}	2.19	8.83
280	22	258	—	—	104	11	17.5	11	—	—	M6	1.97×10^{-2}	9.27	8.55
223	18	205	25	—	82	11	17.5	11	79	—	PT 1/8	1.97×10^{-2}	3.61	9.03
191	17	158	54.5	70.5	100	11	—	—	87	7	M6	1.97×10^{-2}	6.16	9.01

For model number coding, see B15-164.

Preload Type of Precision Ball Screw

Screw shaft outer diameter	45
Lead	6 to 20

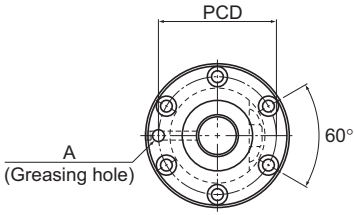

BNFN

Screw shaft outer diameter d	Lead Ph	Model No.	Ball center-to-center diameter dp	Thread minor diameter dc	No. of loaded circuits Rows x turns	Basic load rating Ca kN	Basic load rating C_0a kN	Rigidity K N/μm
45	6	BNFN 4506A-2.5	46	41.4	1×2.5	16	49.6	770
		BNFN 4506A-5	46	41.4	2×2.5	29	99	1500
		BNFN 4506A-7.5	46	41.4	3×2.5	41.2	150	2210
	8	BNFN 4508-2.5	46.25	40.6	1×2.5	20.7	59.5	790
		BNFN 4508-5	46.25	40.6	2×2.5	37.4	118.6	1540
		BNFN 4508-7.5	46.25	40.6	3×2.5	53.1	178.4	2270
	10	BNFN 4510-2.5	46.75	39.5	1×2.5	30.7	79.3	830
		BNFN 4510-3	46.75	39.5	2×1.5	35.9	95.2	990
		BNFN 4510-5	46.75	39.5	2×2.5	55.6	158.8	1610
		BNFN 4510-7.5	46.75	39.5	3×2.5	78.8	238.1	2370
	12	BNFN 4512-5	47	39.2	2×2.5	65.2	178.4	1640
	20	BNFN 4520-1.5	47.7	37.9	1×1.5	44.2	99	690

Note) The model numbers in dimmed type indicate semi-standard types.
If desiring them, contact THK.

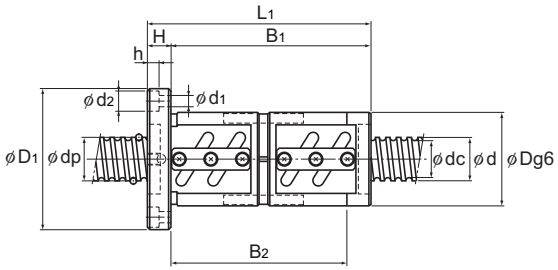

BNFN

Unit: mm

	Nut dimensions									Screw shaft inertial moment/mm	Nut mass	Shaft mass
	Outer diameter D	Flange diameter D_1	Overall length L_1	H	B_1	B_2	PCD	$d_1 \times d_2 \times h$	Greasing hole A	kg・cm²/mm	kg	kg/m
	80	114	89	15	74	—	96	9×14×8.5	PT 1/8	3.16×10^{-2}	2.59	11.31
	80	114	125	15	110	—	96	9×14×8.5	PT 1/8	3.16×10^{-2}	3.42	11.31
	80	114	161	15	146	—	96	9×14×8.5	PT 1/8	3.16×10^{-2}	4.25	11.31
	85	127	116	18	98	—	105	11×17.5×11	PT 1/8	3.16×10^{-2}	4.09	11.21
	85	127	164	18	146	—	105	11×17.5×11	PT 1/8	3.16×10^{-2}	5.41	11.21
	85	127	212	18	194	—	105	11×17.5×11	PT 1/8	3.16×10^{-2}	6.74	11.21
	88	132	141	18	123	104	110	11×17.5×11	PT 1/8	3.16×10^{-2}	5.26	10.65
	88	132	164	18	146	127	110	11×17.5×11	PT 1/8	3.16×10^{-2}	5.96	10.65
	88	132	201	18	183	164	110	11×17.5×11	PT 1/8	3.16×10^{-2}	7.09	10.65
	88	132	261	18	243	224	110	11×17.5×11	PT 1/8	3.16×10^{-2}	8.92	10.65
	90	130	227	18	209	—	110	11×17.5×11	PT 1/8	3.16×10^{-2}	8.24	10.54
	98	142	175	20	155	—	120	11×17.5×11	PT 1/8	3.16×10^{-2}	8.31	10.37

For model number coding, see B15-164.

Preload Type of Precision Ball Screw

Screw shaft outer diameter	50
Lead	5 to 10

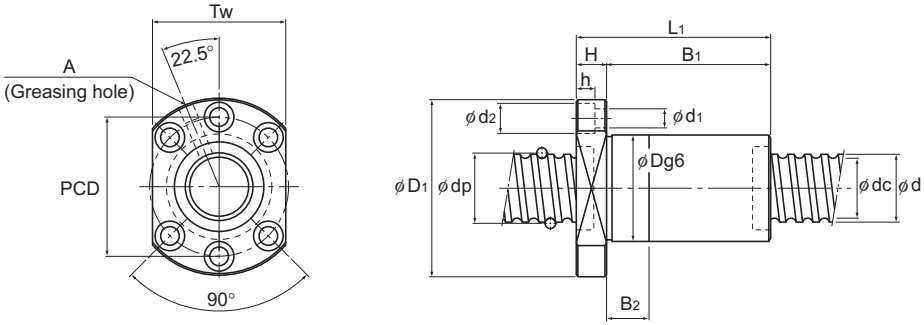

DIK (2805 to 6312)

Screw shaft outer diameter d	Lead Ph	Model No.	Ball center-to-center diameter dp	Thread minor diameter dc	No. of loaded circuits Rows x turns	Basic load rating Ca kN	Basic load rating C_0a kN	Rigidity K N/μm
50	5	○ BNFN 5005-3	50.75	47.2	2×1.5	14.2	53	970
		○ BNFN 5005-4.5	50.75	47.2	3×1.5	20.2	79.5	1420
	8	○ BNFN 5008-2.5	51.25	45.5	1×2.5	21.6	66.2	860
		○ BNFN 5008-5	51.25	45.5	2×2.5	39.1	132.3	1680
		○ BNFN 5008-7.5	51.25	45.5	3×2.5	55.4	198.9	2470
	10	DIK 5010-6	51.75	44.4	3×1	33.9	90.7	940
		DIK 5010-8	51.75	44.4	4×1	43.4	120.5	1230
		DIK 5010-10	51.75	44.4	5×1	52.5	150.9	1530
		○ BIF 5010-5	51.75	44.4	1×2.5	32	88.2	900
		○ BIF 5010-10	51.75	44.4	2×2.5	58.2	176.4	1750
		○ BNFN 5010-2.5	51.75	44.4	1×2.5	32	88.2	900
		○ BNFN 5010-3	51.75	44.4	2×1.5	37.5	105.8	1080
		○ BNFN 5010-3.5	51.75	44.4	1×3.5	42.8	123.5	1240
		○ BNFN 5010-5	51.75	44.4	2×2.5	58.2	176.4	1750
		○ BNFN 5010-7.5	51.75	44.4	3×2.5	82.5	264.6	2580

Note) The model numbers in dimmed type indicate semi-standard types. If desiring them, contact THK.
Those models marked with ○ can be attached with QZ Lubricator or the wiper ring.
For dimensions of the ball screw nut with either accessory being attached, see B15-228.

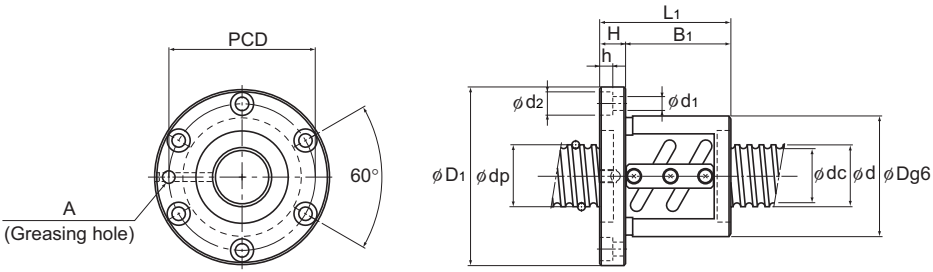

BIF

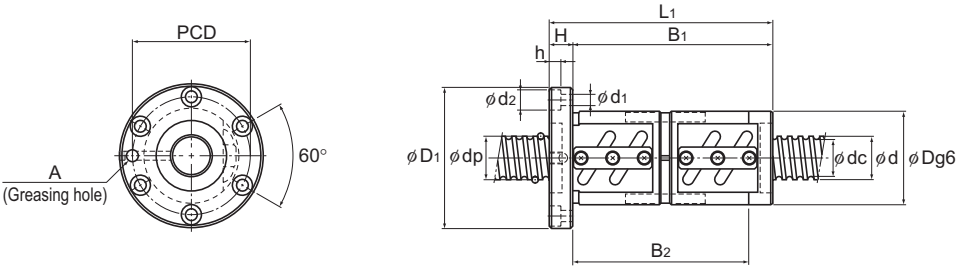

BNFN

Unit: mm

	Nut dimensions										Screw shaft inertial moment/mm	Nut mass	Shaft mass
	Outer diameter D	Flange diameter D_1	Overall length L_1	H	B_1	B_2	PCD	$d_1 \times d_2 \times h$	Tw	Greasing hole A	kg·cm²/mm	kg	kg/m
	80	114	108	15	93	—	96	9×14×8.5	—	PT 1/8	4.82×10^{-2}	2.71	14.42
	80	114	128	15	113	—	96	9×14×8.5	—	PT 1/8	4.82×10^{-2}	3.12	14.42
	87	129	109	18	91	—	107	11×17.5×11	—	PT 1/8	4.82×10^{-2}	3.8	14.0
	87	129	157	18	139	—	107	11×17.5×11	—	PT 1/8	4.82×10^{-2}	5.08	14.0
	87	129	205	18	187	—	107	11×17.5×11	—	PT 1/8	4.82×10^{-2}	6.35	14.0
	72	123	114	18	96	30	101	11×17.5×11	92	PT 1/8	4.82×10^{-2}	2.65	13.38
	72	123	137	18	119	35	101	11×17.5×11	92	PT 1/8	4.82×10^{-2}	3.03	13.38
	72	123	160	18	142	45	101	11×17.5×11	92	PT 1/8	4.82×10^{-2}	3.41	13.38
	93	135	103	18	85	—	113	11×17.5×11	—	PT 1/8	4.82×10^{-2}	4.31	13.38
	93	135	163	18	145	—	113	11×17.5×11	—	PT 1/8	4.82×10^{-2}	6.26	13.38
	93	135	133	18	115	96	113	11×17.5×11	—	PT 1/8	4.82×10^{-2}	5.28	13.38
	93	135	170	18	152	133	113	11×17.5×11	—	PT 1/8	4.82×10^{-2}	6.49	13.38
	93	135	153	18	135	116	113	11×17.5×11	—	PT 1/8	4.82×10^{-2}	5.94	13.38
	93	135	193	18	175	156	113	11×17.5×11	—	PT 1/8	4.82×10^{-2}	7.24	13.38
	93	135	253	18	235	216	113	11×17.5×11	—	PT 1/8	4.82×10^{-2}	9.19	13.38

For model number coding, see B15-164.

Preload Type of Precision Ball Screw

Screw shaft outer diameter	50
Lead	12 to 50

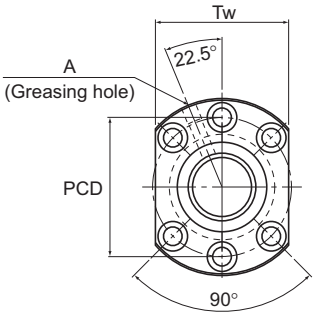

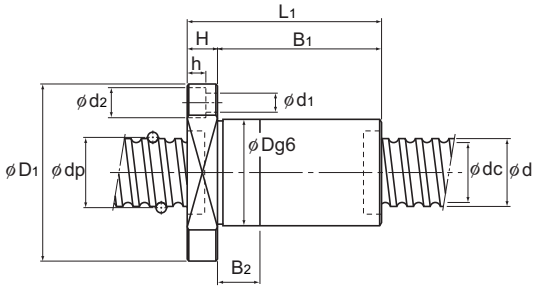

DIK (2805 to 6312)

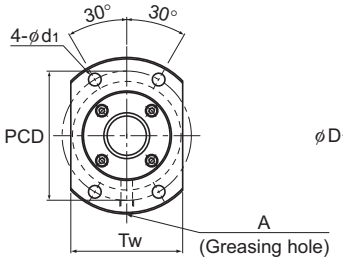

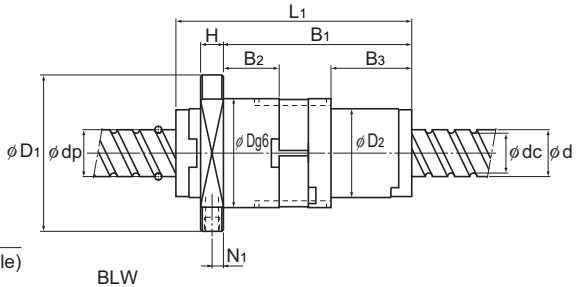

BLW

Screw shaft outer diameter d	Lead Ph	Model No.	Ball center-to-center diameter dp	Thread minor diameter dc	No. of loaded circuits Rows x turns	Basic load rating Ca kN	Basic load rating C_0a kN	Rigidity K N/μm	Outer diameter D	Flange diameter D_1	D_2
50	12	DIK 5012-6	52.25	43.3	3×1	45.8	113	970	75	129	—
		DIK 5012-8	52.25	43.3	4×1	58.6	150.6	1270	75	129	—
		○ BNFN 5012-2.5	52.25	43.3	1×2.5	43.4	109.8	930	100	146	—
		○ BNFN 5012-3.5	52.25	43.3	1×3.5	58	153.9	1280	100	146	—
		○ BNFN 5012-5	52.25	43.3	2×2.5	78.8	220.5	1810	100	146	—
	16	DIK 5016-4	52.25	43.3	2×1	32.3	75.5	660	75	129	—
		DIK 5016-6	52.25	43.3	3×1	45.7	113.3	970	75	129	—
		○ BNFN 5016-2.5	52.7	42.9	1×2.5	72.6	183.3	1230	105	152	—
		○ BNFN 5016-5	52.7	42.9	2×2.5	132.3	366.5	2360	105	152	—
	20	DKN 5020-3	52.25	43.6	3×1	44.2	108.8	930	75	129	—
		○ BNFN 5020-2.5	52.7	42.9	1×2.5	72.5	183.3	1230	105	152	—
	50	BLW 5050-3.6	52.2	44.1	2×1.8	57.8	155	1340	106	149	90

Note) The model numbers in dimmed type indicate semi-standard types. If desiring them, contact THK.
Those models marked with ○ can be attached with QZ Lubricator or the wiper ring.
For dimensions of the ball screw nut with either accessory being attached, see B15-228.
Model BLW cannot be attached with seal.

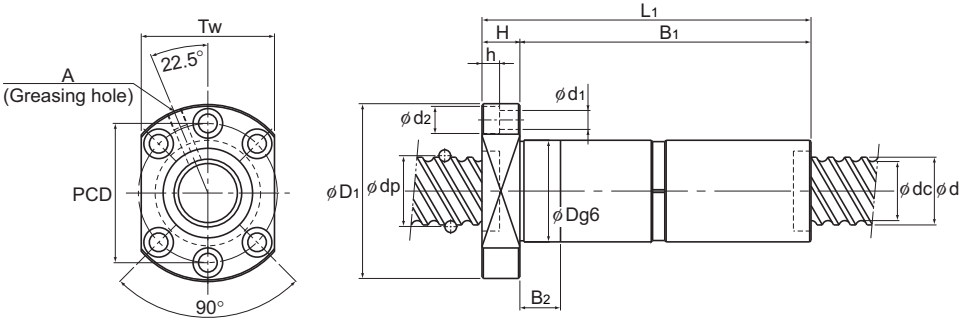

DKN

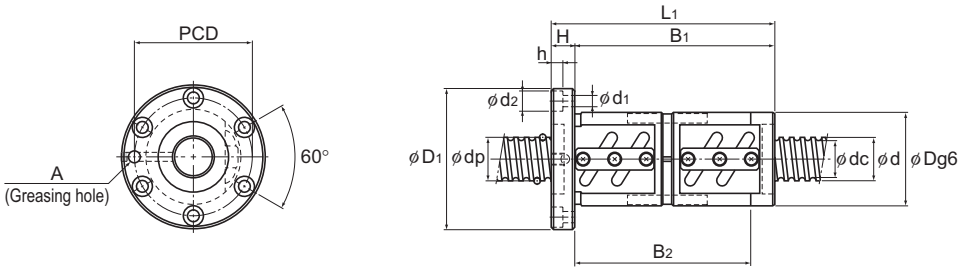

BNFN

Unit: mm

Nut dimensions												Screw shaft inertial moment/mm	Nut mass	Shaft mass
Overall length L_1	H	B_1	B_2	B_3	PCD	d_1	d_2	h	Tw	N_1	Greasing hole A	kg・cm²/mm	kg	kg/m
145	22	123	35	—	105	14	20	13	98	—	PT 1/8	4.82×10^{-2}	3.83	12.74
170	22	148	45	—	105	14	20	13	98	—	PT 1/8	4.82×10^{-2}	4.31	12.74
159	22	137	114	—	122	14	20	13	—	—	PT 1/8	4.82×10^{-2}	7.75	12.74
183	22	161	138	—	122	14	20	13	—	—	PT 1/8	4.82×10^{-2}	8.71	12.74
231	22	209	186	—	122	14	20	13	—	—	PT 1/8	4.82×10^{-2}	10.63	12.74
129	22	107	30	—	105	14	20	13	98	—	PT 1/8	4.82×10^{-2}	3.52	13.41
175	22	153	45	—	105	14	20	13	98	—	PT 1/8	4.82×10^{-2}	4.41	13.41
196	25	171	—	—	128	14	20	13	—	—	PT 1/8	4.82×10^{-2}	10.64	12.5
292	25	267	—	—	128	14	20	13	—	—	PT 1/8	4.82×10^{-2}	15.03	12.5
243	28	215	30	—	105	14	20	13	98	—	PT 1/8	4.82×10^{-2}	6.0	13.8
241	28	213	—	—	128	14	20	13	—	—	PT 1/8	4.82×10^{-2}	12.9	13.1
245	20	203.8	70.7	91.7	126	14	—	—	108	8	M6	4.82×10^{-2}	9.06	14.08

For model number coding, see B15-164.

Preload Type of Precision Ball Screw

Screw shaft outer diameter	55
Lead	10 to 20

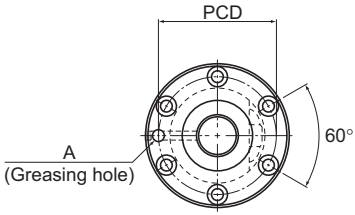

BNFN

Screw shaft outer diameter d	Lead Ph	Model No.	Ball center-to-center diameter dp	Thread minor diameter dc	No. of loaded circuits Rows x turns	Basic load rating Ca kN	Basic load rating C_0a kN	Rigidity K N/μm
55	10	BNFN 5510-2.5	56.75	49.5	1×2.5	33.4	97	970
		BNFN 5510-5	56.75	49.5	2×2.5	60.7	194	1890
		BNFN 5510-7.5	56.75	49.5	3×2.5	85.9	291.1	2770
	12	BNFN 5512-2.5	57	49.2	1×2.5	39.3	108.8	990
		BNFN 5512-3	57	49.2	2×1.5	46	131.3	1180
		BNFN 5512-3.5	57	49.2	1×3.5	52.4	152.9	1360
		BNFN 5512-5	57	49.2	2×2.5	71.3	218.5	1920
		BNFN 5512-7.5	57	49.2	3×2.5	100.9	327.3	2830
	16	BNFN 5516-2.5	57.7	47.9	1×2.5	76.1	201.9	1310
		BNFN 5516-5	57.7	47.9	2×2.5	138.2	402.8	2550
	20	BNFN 5520-2.5	57.7	47.9	1×2.5	76	201.9	1320
		BNFN 5520-5	57.7	47.9	2×2.5	138.2	403.8	2550

Note) The model numbers in dimmed type indicate semi-standard types.
If desiring them, contact THK.

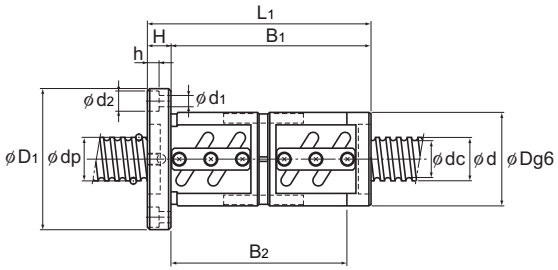

BNFN

Unit: mm

	Nut dimensions								Screw shaft inertial moment/mm	Nut mass	Shaft mass
	Outer diameter D	Flange diameter D_1	Overall length L_1	H	B_1	PCD	$d_1 \times d_2 \times h$	Greasing hole A	$kg \cdot cm^2/mm$	kg	kg/m
	102	144	141	18	123	122	11×17.5×11	PT 1/8	7.05×10^{-2}	6.54	16.43
	102	144	201	18	183	122	11×17.5×11	PT 1/8	7.05×10^{-2}	8.88	16.43
	102	144	261	18	243	122	11×17.5×11	PT 1/8	7.05×10^{-2}	11.23	16.43
	105	147	165	18	147	125	11×17.5×11	PT 1/8	7.05×10^{-2}	8.07	16.29
	105	147	191	18	173	125	11×17.5×11	PT 1/8	7.05×10^{-2}	9.17	16.29
	105	147	189	18	171	125	11×17.5×11	PT 1/8	7.05×10^{-2}	9.09	16.29
	105	147	237	18	219	125	11×17.5×11	PT 1/8	7.05×10^{-2}	11.13	16.29
	105	147	309	18	291	125	11×17.5×11	PT 1/8	7.05×10^{-2}	14.19	16.29
	110	158	196	25	171	133	14×20×13	PT 1/8	7.05×10^{-2}	11.28	15.46
	110	158	292	25	267	133	14×20×13	PT 1/8	7.05×10^{-2}	15.94	15.46
	112	158	227	28	199	134	14×20×13	PT 1/8	7.05×10^{-2}	13.49	16.1
	112	158	347	28	319	134	14×20×13	PT 1/8	7.05×10^{-2}	19.61	16.1

For model number coding, see B15-164.

Preload Type of Precision Ball Screw

Screw shaft outer diameter	63
Lead	10 to 20

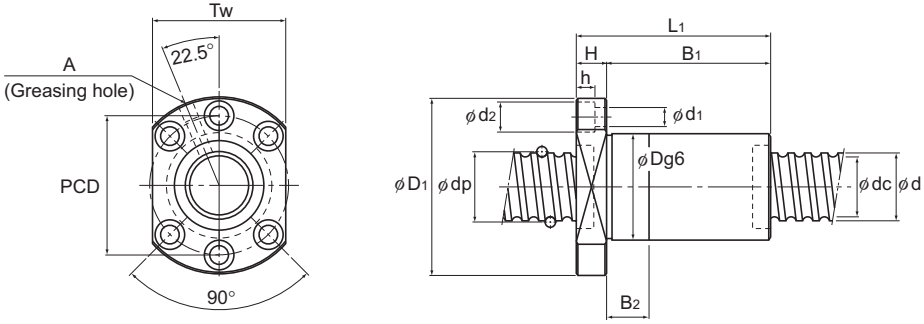

DIK (2805 to 6312)

Screw shaft outer diameter d	Lead Ph	Model No.	Ball center-to-center diameter dp	Thread minor diameter dc	No. of loaded circuits Rows x turns	Basic load rating Ca kN	Basic load rating C0a kN	Rigidity K N/μm
63	10	DIK 6310-8	64.75	57.7	4×1	49.5	160.7	1550
		BNFN 6310-2.5	64.75	57.7	1×2.5	35.4	111.7	1090
		BNFN 6310-5	64.75	57.7	2×2.5	64.2	222.5	2100
		BNFN 6310-7.5	64.75	57.7	3×2.5	90.9	334.2	3090
	12	DIK 6312-6	65.25	56.3	3×1	51.9	147.4	1200
		DIK 6312-8	65.25	56.3	4×1	66.4	196.6	1570
		BNFN 6312A-2.5	65.25	56.3	1×2.5	48.1	139.2	1120
		BNFN 6312A-5	65.25	56.3	2×2.5	87.4	278.3	2160
	16	BNFN 6316-2.5	65.7	55.9	1×2.5	81.1	231.3	1470
		BNFN 6316-5	65.7	55.9	2×2.5	147	462.6	2840
	20	BNFN 6320-2.5	65.7	55.9	1×2.5	81	231.3	1470
		BNFN 6320-5	65.7	55.9	2×2.5	147	463.5	2640
		DKN 6320-3	65.7	55.9	3×1	83.5	229.3	1470

Note) The model numbers in dimmed type indicate semi-standard types.
If desiring them, contact THK.

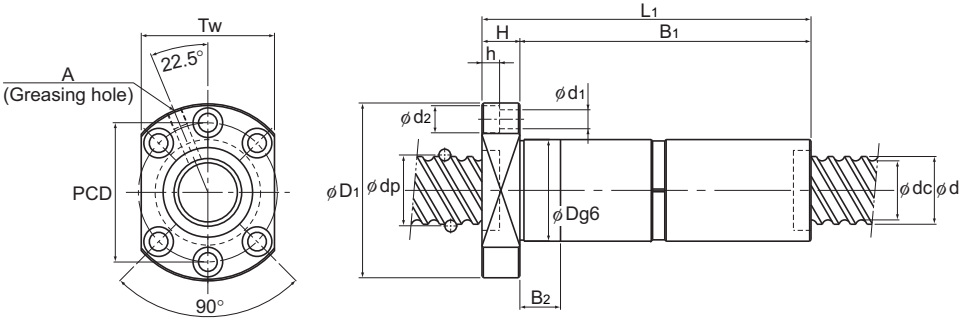

DKN

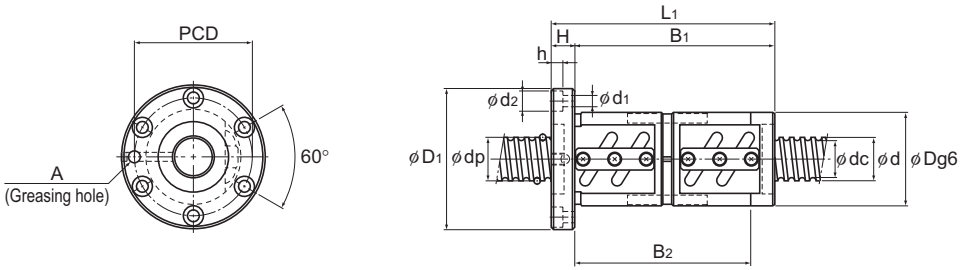

BNFN

Unit: mm

	Nut dimensions										Screw shaft inertial moment/mm	Nut mass	Shaft mass
	Outer diameter D	Flange diameter D_1	Overall length L_1	H	B_1	B_2	PCD	$d_1 \times d_2 \times h$	Tw	Greasing hole A	kg・cm²/mm	kg	kg/m
	85	146	141	22	119	35	122	14×20×13	110	PT 1/8	1.21×10^{-1}	4.16	21.93
	108	154	137	22	115	—	130	14×20×13	—	PT 1/8	1.21×10^{-1}	6.98	21.93
	108	154	197	22	175	—	130	14×20×13	—	PT 1/8	1.21×10^{-1}	9.4	21.93
	108	154	257	22	235	—	130	14×20×13	—	PT 1/8	1.21×10^{-1}	11.81	21.93
	90	146	146	22	124	35	122	14×20×13	110	PT 1/8	1.21×10^{-1}	4.93	21.14
	90	146	171	22	149	45	122	14×20×13	110	PT 1/8	1.21×10^{-1}	5.56	21.14
	115	161	159	22	137	—	137	14×20×13	—	PT 1/8	1.21×10^{-1}	9.32	21.14
	115	161	231	22	209	—	137	14×20×13	—	PT 1/8	1.21×10^{-1}	12.84	21.14
	122	184	208	24	184	—	152	18×26×17.5	—	PT 1/8	1.21×10^{-1}	14.61	20.85
	122	184	304	24	280	—	152	18×26×17.5	—	PT 1/8	1.21×10^{-1}	20.19	20.85
	122	180	227	28	199	—	150	18×26×17.5	—	PT 1/8	1.21×10^{-1}	15.91	20.85
	122	180	347	28	319	—	150	18×26×17.5	—	PT 1/8	1.21×10^{-1}	22.88	20.85
	95	159	243	28	215	30	129	18×26×17.5	121	PT 1/8	1.21×10^{-1}	9.5	20.85

For model number coding, see B15-164.

Preload Type of Precision Ball Screw

Screw shaft outer diameter	70 to 100
Lead	10 to 20

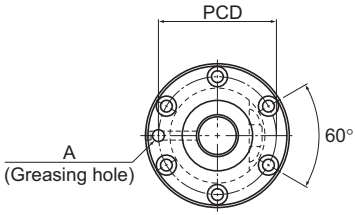

BNFN

Screw shaft outer diameter d	Lead Ph	Model No.	Ball center-to-center diameter dp	Thread minor diameter dc	No. of loaded circuits Rows x turns	Basic load rating Ca kN	Basic load rating C_0a kN	Rigidity K N/μm
70	10	BNFN 7010-2.5	71.75	64.5	1×2.5	36.8	123.5	1180
		BNFN 7010-5	71.75	64.5	2×2.5	66.9	247	2280
		BNFN 7010-7.5	71.75	64.5	3×2.5	94.9	371.4	3350
	12	BNFN 7012-2.5	72	64.2	1×2.5	43.5	139.2	1200
		BNFN 7012-5	72	64.2	2×2.5	78.9	278.3	2320
		BNFN 7012-7.5	72	64.2	3×2.5	111.7	417.5	3420
	20	BNFN 7020-5	72.7	62.9	2×2.5	153.9	514.5	3090
80	10	BNFN 8010-2.5	81.75	75.2	1×2.5	38.9	141.1	1300
		BNFN 8010-5	81.75	75.2	2×2.5	70.6	283.2	2530
		BNFN 8010-7.5	81.75	75.2	3×2.5	100	424.3	3720
	12	BNFN 8012-5	82.3	74.1	2×2.5	96.5	353.8	2620
	20	BNFN 8020A-2.5	82.7	72.9	1×2.5	90.1	294	1770
		BNFN 8020A-5	82.7	72.9	2×2.5	163.7	589	3430
100	20	BNFN 10020A-2.5	102.7	92.9	1×2.5	99	368.5	2110
		BNFN 10020A-5	102.7	92.9	2×2.5	179.3	737	4080
		BNFN 10020A-7.5	102.7	92.9	3×2.5	253.8	1105.4	6010

Note) The model numbers in dimmed type indicate semi-standard types.
If desiring them, contact THK.

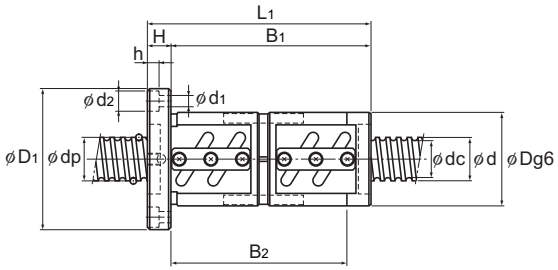

BNFN

Unit: mm

	Nut dimensions								Screw shaft inertial moment/mm	Nut mass	Shaft mass
	Outer diameter D	Flange diameter D_1	Overall length L_1	H	B_1	PCD	$d_1 \times d_2 \times h$	Greasing hole A	kg・cm²/mm	kg	kg/m
	125	167	141	18	123	145	11×17.5×11	PT 1/8	1.85×10^{-1}	9.19	27.4
	125	167	201	18	183	145	11×17.5×11	PT 1/8	1.85×10^{-1}	12.57	27.4
	125	167	261	18	243	145	11×17.5×11	PT 1/8	1.85×10^{-1}	15.96	27.4
	128	170	165	18	147	148	11×17.5×11	PT 1/8	1.85×10^{-1}	11.26	27.24
	128	170	237	18	219	148	11×17.5×11	PT 1/8	1.85×10^{-1}	15.63	27.24
	128	170	309	18	291	148	11×17.5×11	PT 1/8	1.85×10^{-1}	20.0	27.24
	130	186	325	28	297	158	18×26×17.5	PT 1/8	1.85×10^{-1}	23.4	27.0
	130	176	137	22	115	152	14×20×13	PT 1/8	3.16×10^{-1}	9.15	36.26
	130	176	197	22	175	152	14×20×13	PT 1/8	3.16×10^{-1}	12.41	36.26
	130	176	257	22	235	152	14×20×13	PT 1/8	3.16×10^{-1}	15.67	36.26
	135	181	231	22	209	157	14×20×13	PT 1/8	3.16×10^{-1}	16.02	35.26
	143	204	227	28	199	172	18×26×17.5	PT 1/8	3.16×10^{-1}	20.08	35.81
	143	204	347	28	319	172	18×26×17.5	PT 1/8	3.16×10^{-1}	28.97	35.81
	170	243	231	32	199	205	22×32×21.5	PT 1/8	7.71×10^{-1}	28.15	57.13
	170	243	351	32	319	205	22×32×21.5	PT 1/8	7.71×10^{-1}	39.99	57.13
	170	243	471	32	439	205	22×32×21.5	PT 1/8	7.71×10^{-1}	51.84	57.13

For model number coding, see B15-164.

No Preload Type of Precision Ball Screw

Screw shaft outer diameter	4 to 15
Lead	1 to 40

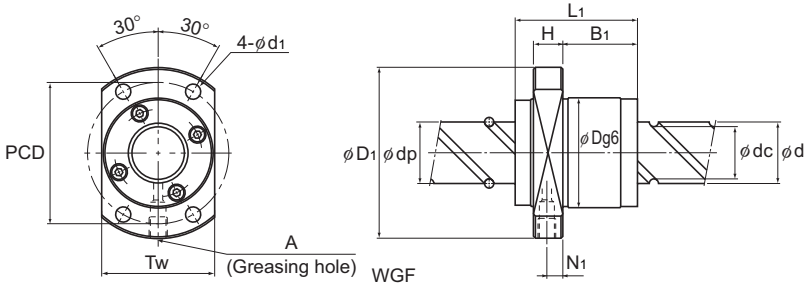

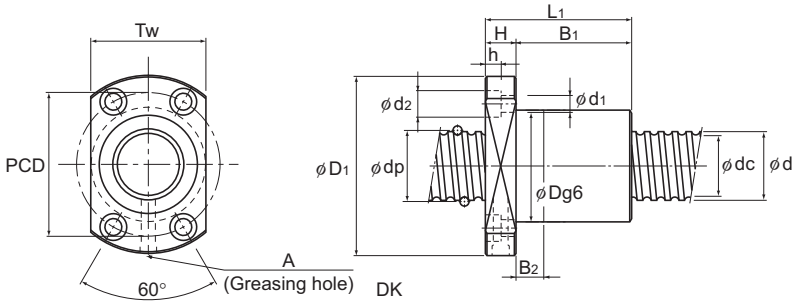

Screw shaft outer diameter d	Lead Ph	Model No.	Ball center-to-center diameter dp	Thread minor diameter dc	No. of loaded circuits Rows x turns	Basic load rating Ca kN	Basic load rating C_0a kN	Rigidity K N/μm	Outer diameter D	Flange diameter D_1
4	1	MDK 0401-3	4.15	3.4	3×1	0.29	0.42	35	9	19
6	1	MDK 0601-3	6.2	5.3	3×1	0.54	0.94	60	11	23
8	1	MDK 0801-3	8.2	7.3	3×1	0.64	1.4	80	13	26
	2	MDK 0802-3	8.3	7	3×1	1.4	2.3	80	15	28
	12	WGF 0812-3	8.4	6.6	2×1.65	2.2	3.9	110	18	31
10	2	MDK 1002-3	10.3	9	3×1	1.5	2.9	100	17	34
	15	WGF 1015-3	10.5	8.3	2×1.65	3.3	6.2	140	23	40
12	2	MDK 1202-3	12.3	11	3×1	1.7	3.6	120	19	36
13	20	WGF 1320-3	13.5	10.8	2×1.65	4.7	9.6	180	28	45
14	2	MDK 1402-3	14.3	13	3×1	1.8	4.3	190	21	40
	4	MDK 1404-3	14.65	11.9	3×1	4.2	7.6	190	26	45
		DK 1404-4	14.5	11.8	4×1	5.4	10.2	180	26	45
		DK 1404-6	14.5	11.8	6×1	7.7	15.4	270	26	45
	5	MDK 1405-3	14.75	11.2	3×1	7	11.6	140	26	45
15	10	BLK 1510-5.6	15.75	12.5	2×2.8	14.3	27.8	340	34	57
	20	WGF 1520-1.5	15.75	12.5	1×1.5	4.4	7.9	100	32	53
		WGF 1520-3	15.75	12.5	2×1.5	8.1	15.8	190	32	53
	30	WGF 1530-1	15.75	12.5	2×0.6	3.5	5.4	90	32	53
		WGF 1530-3	15.75	12.5	2×1.6	8.1	14.6	220	32	53
	40	WGF 1540-1.5	15.75	12.5	2×0.75	3.9	7.4	110	32	53

Note) Models MDK0401, 0601 and 0801 is not provided with a labyrinth seal.
Models MDK0401, 0601, 0801, model WGF and Large Lead Precision Ball Screw model BLK cannot be attached with seal.

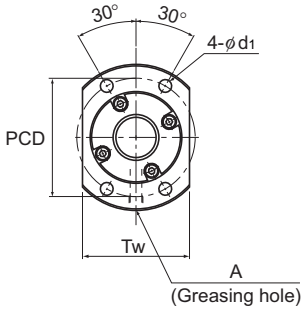

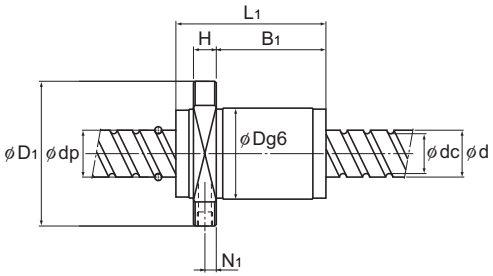

BLK

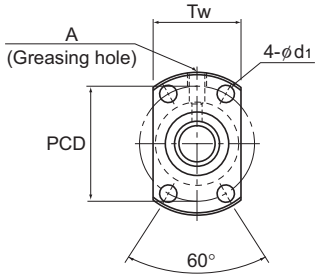

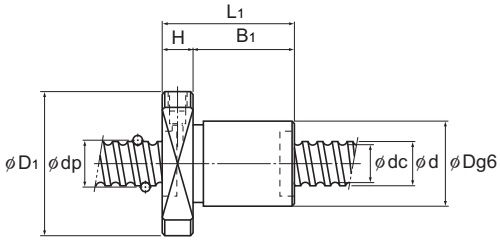

MDK

Unit: mm

Nut dimensions											Screw shaft inertial moment/mm	Nut mass	Shaft mass
	Overall length L_1	H	B_1	B_2	PCD	d_1	d_2	h	Tw	N_1	Greasing hole A	$kg \cdot cm^2/mm$	kg	kg/m
	13	3	10	—	14	2.9	—	—	13	—	—	1.97×10^{-6}	0.01	0.07
	14.5	3.5	11	—	17	3.4	—	—	15	—	—	9.99×10^{-6}	0.017	0.14
	15	4	11	—	20	3.4	—	—	17	—	—	3.16×10^{-5}	0.024	0.29
	22	5	17	—	22	3.4	—	—	19	—	—	3.16×10^{-5}	0.034	0.27
	27	4	17	—	25	3.4	—	—	20	—	—	3.16×10^{-5}	0.054	0.35
	22	5	17	—	26	4.5	—	—	21	—	—	7.71×10^{-5}	0.045	0.47
	33	5	22	—	32	4.5	—	—	25	—	—	7.71×10^{-5}	0.11	0.55
	22	5	17	—	28	4.5	—	—	23	—	—	1.6×10^{-4}	0.05	0.71
	43	5	29	—	37	4.5	—	—	30	—	—	2.2×10^{-4}	0.18	0.96
	23	6	17	—	31	5.5	—	—	26	—	—	2.96×10^{-4}	0.15	1.0
	33	6	27	—	36	5.5	—	—	28	—	—	2.96×10^{-4}	0.13	0.8
	48	10	38	10	35	4.5	8	4.5	29	—	M6	2.96×10^{-4}	0.2	1
	60	10	50	10	35	4.5	8	4.5	29	—	M6	2.96×10^{-4}	0.23	1
	42	10	32	—	36	5.5	—	—	28	—	M6	2.96×10^{-4}	0.18	0.91
	44	10	24	—	45	5.5	—	—	40	5	M6	3.9×10^{-4}	0.34	0.31
	45	10	28	—	43	5.5	—	—	33	5	M6	3.9×10^{-4}	0.29	1.22
	45	10	28	—	43	5.5	—	—	33	5	M6	3.9×10^{-4}	0.29	1.22
	33	10	17	—	43	5.5	—	—	33	5	M6	3.9×10^{-4}	0.23	1.26
	63	10	47	—	43	5.5	—	—	33	5	M6	3.9×10^{-4}	0.38	1.26
	42	10	26.3	—	43	5.5	—	—	33	5	M6	3.9×10^{-4}	0.28	1.28

For model number coding, see B15-164.

No Preload Type of Precision Ball Screw

Screw shaft outer diameter	16 to 18
Lead	4 to 16

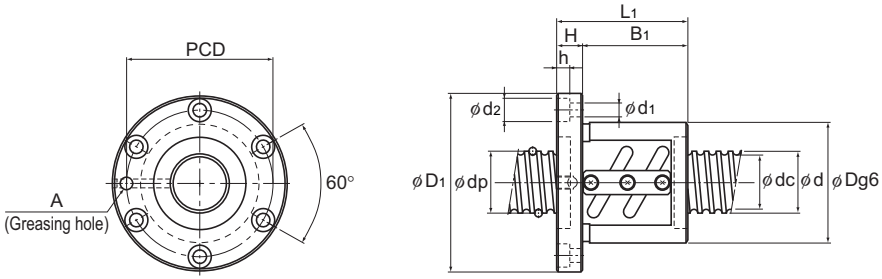

BNF

Screw shaft outer diameter d	Lead Ph	Model No.	Ball center-to-center diameter dp	Thread minor diameter dc	No. of loaded circuits Rows x turns	Basic load rating Ca kN	Basic load rating C₀a kN	Rigidity K N/μm	Outer diameter D	Flange diameter D₁
16	4	BNF 1604-3	16.5	13.8	2×1.5	5.1	10.5	180	36	59
	5	BNF 1605-2.5	16.75	13.2	1×2.5	7.4	13.9	170	40	60
		BNF 1605-3	16.75	13.2	2×1.5	8.7	16.8	200	40	60
		BNF 1605-5	16.75	13.2	2×2.5	13.5	27.8	320	40	60
		DK 1605-3	16.75	13.1	3×1	7.4	13	160	30	49
		DK 1605-4	16.75	13.1	4×1	9.5	17.4	210	30	49
	6	BNF 1606-2.5	16.8	13.2	1×2.5	7.5	14	170	40	60
		BNF 1606-5	16.8	13.2	2×2.5	13.5	28	320	40	60
	10	BNF 1610-1.5	16.8	13.5	1×1.5	4.8	8.5	100	40	63
	16	BLK 1616-2.8	16.65	13.7	1×2.8	5.2	9.9	180	32	53
		BLK 1616-3.6	16.65	13.7	2×1.8	7.1	14.3	220	32	53
18	10	BNF 1810-2.5	18.8	15.5	1×2.5	7.8	15.9	190	42	65
		BNF 1810-3	18.8	15.5	2×1.5	9.2	19.1	220	42	65

Note) The model numbers in dimmed type indicate semi-standard types.
If desiring them, contact THK.
Large Lead Precision Ball Screw model BLK cannot be attached with seal.

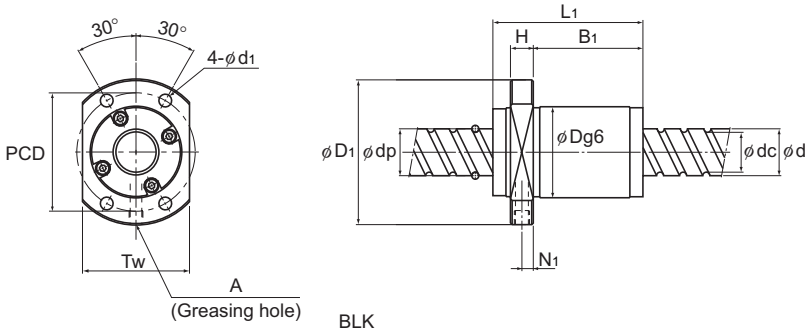

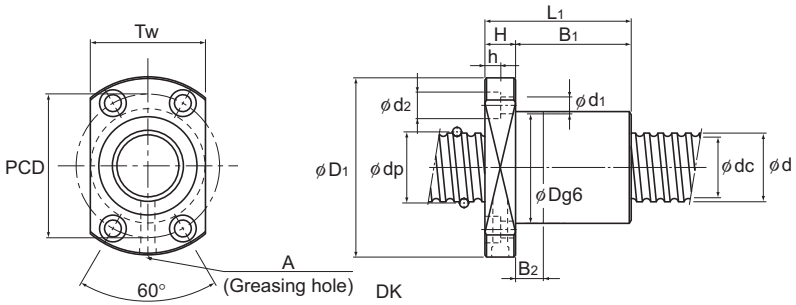

Unit: mm

Nut dimensions											Screw shaft inertial moment/mm	Nut mass	Shaft mass
Overall length L_1	H	B_1	B_2	PCD	d_1	d_2	h	Tw	N_1	Greasing hole A	kg·cm²/mm	kg	kg/m
45	11	34	—	47	5.5	9.5	5.5	—	—	M6	5.05×10^{-4}	0.32	1.35
41	10	31	—	50	4.5	8	4.5	—	—	M6	5.05×10^{-4}	0.37	1.24
51	10	41	—	50	4.5	8	4.5	—	—	M6	5.05×10^{-4}	0.47	1.24
56	10	46	—	50	4.5	8	4.5	—	—	M6	5.05×10^{-4}	0.49	1.24
45	10	35	10	39	4.5	8	4.5	31	—	M6	5.05×10^{-4}	0.24	1.25
50	10	40	10	39	4.5	8	4.5	31	—	M6	5.05×10^{-4}	0.26	1.25
44	10	34	—	50	4.5	8	4.5	—	—	M6	5.05×10^{-4}	0.41	1.3
62	10	52	—	50	4.5	8	4.5	—	—	M6	5.05×10^{-4}	0.49	1.3
42	11	31	—	51	5.5	9.5	5.5	—	—	M6	5.05×10^{-4}	0.32	1.41
54	10	37.5	—	42	4.5	—	—	38	5	M6	5.05×10^{-4}	0.32	1.41
38	10	21.5	—	42	4.5	—	—	38	5	M6	5.05×10^{-4}	0.21	1.41
69	12	57	—	53	5.5	9.5	5.5	—	—	M6	8.09×10^{-4}	0.67	1.81
75	12	63	—	53	5.5	9.5	5.5	—	—	M6	8.09×10^{-4}	0.63	1.81

For model number coding, see B15-164.

No Preload Type of Precision Ball Screw

Screw shaft outer diameter	20
Lead	4 to 60

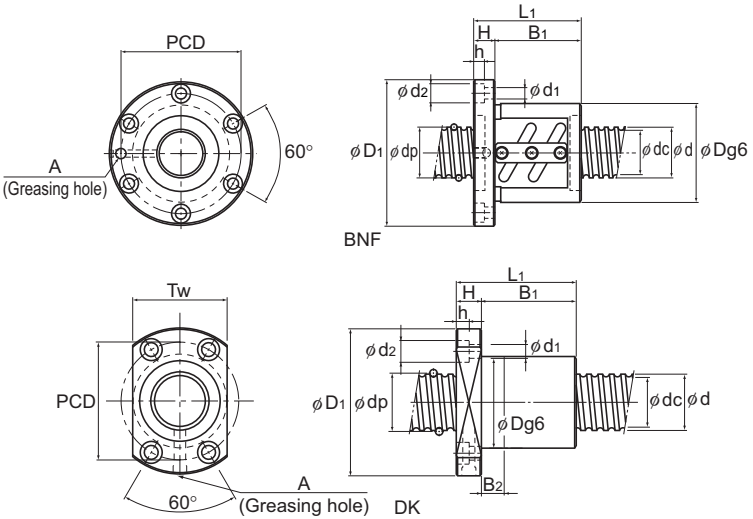

Screw shaft outer diameter d	Lead Ph	Model No.	Ball center-to-center diameter dp	Thread minor diameter dc	No. of loaded circuits Rows x turns	Basic load rating Ca kN	Basic load rating C_0a kN	Rigidity K N/μm	Outer diameter D	Flange diameter D_1
20	4	BNF 2004-2.5	20.5	17.8	1×2.5	4.8	10.9	180	40	63
		BNF 2004-5	20.5	17.8	2×2.5	8.6	21.8	350	40	63
		DK 2004-3	20.5	17.8	3×1	5.2	11.6	190	32	56
		DK 2004-4	20.5	17.8	4×1	6.6	15.5	250	32	56
	5	BNF 2005-2.5	20.75	17.2	1×2.5	8.3	17.4	200	44	67
		BNF 2005-3	20.75	17.2	2×1.5	9.7	21	240	44	67
		BNF 2005-3.5	20.75	17.2	1×3.5	11.1	24.5	270	44	67
		BNF 2005-5	20.75	17.2	2×2.5	15.1	35	380	44	67
		DK 2005-3	20.75	17.1	3×1	8.5	17.3	200	34	58
		DK 2005-4	20.75	17.1	4×1	11	23.1	260	34	58
	6	BNF 2006-2.5	20.75	17.2	1×2.5	8.3	17.5	200	48	71
		BNF 2006-3	20.75	17.2	2×1.5	9.7	21	240	48	71
		BNF 2006-3.5	20.75	17.2	1×3.5	11.1	24.5	270	48	71
		BNF 2006-5	20.75	17.2	2×2.5	15.1	35	380	48	71
		DK 2006-3	21	16.4	3×1	11.4	21.5	410	35	58
		DK 2006-4	21	16.4	4×1	14.6	28.6	540	35	58
	8	BNF 2008-2.5	21	16.4	1×2.5	11.1	21.9	210	46	74
		DK 2008-4	21	16.4	4×1	14.6	28.8	270	35	58
	10	BNF 2010A-1.5	21	16.4	1×1.5	7.2	13.2	130	46	74
	12	BNF 2012-1.5	21	16.4	1×1.5	7.1	13.2	130	48	71
	20	BLK 2020-2.8	20.75	17.5	1×2.8	8.1	17.2	230	39	62
		BLK 2020-3.6	20.75	17.5	2×1.8	11.1	24.7	290	39	62
	40	WGF 2040-1	20.75	17.5	2×0.65	4.3	8	110	37	57
		WGF 2040-3	20.75	17.5	2×1.65	9.5	20.2	280	37	57
	60	WGF 2060-1.5	20.75	17.5	2×0.75	4.5	11	140	37	57

Note) The model numbers in dimmed type indicate semi-standard types. If desiring them, contact THK.
Model WGF and Large Lead Precision Ball Screw model BLK cannot be attached with seal.

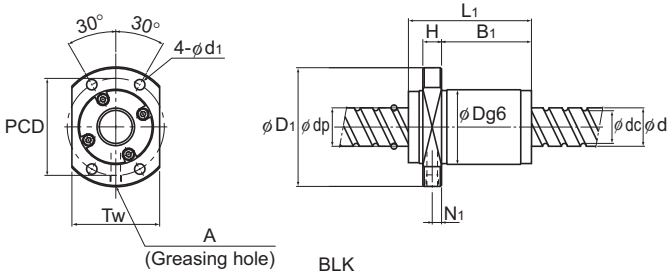

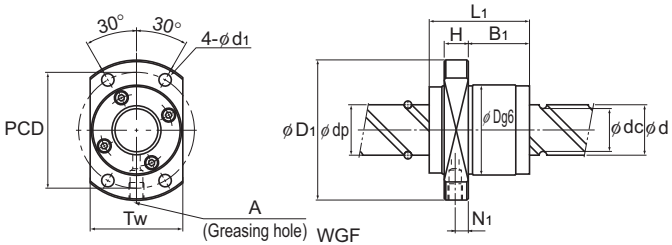

Unit: mm

Nut dimensions											Screw shaft inertial moment/mm	Nut mass	Shaft mass
Overall length L_1	H	B_1	B_2	PCD	d_1	d_2	h	Tw	N_1	Greasing hole A	kg・cm²/mm	kg	kg/m
37	11	26	—	51	5.5	9.5	5.5	—	—	M6	1.23×10^{-3}	0.3	2.18
49	11	38	—	51	5.5	9.5	5.5	—	—	M6	1.23×10^{-3}	0.49	2.18
42	11	31	10	44	5.5	9.5	5.5	35	—	M6	1.23×10^{-3}	0.26	2.18
46	11	35	10	44	5.5	9.5	5.5	35	—	M6	1.23×10^{-3}	0.27	2.18
41	11	30	—	55	5.5	9.5	5.5	—	—	M6	1.23×10^{-3}	0.46	2.05
52	11	41	—	55	5.5	9.5	5.5	—	—	M6	1.23×10^{-3}	0.53	2.05
45	11	34	—	55	5.5	9.5	5.5	—	—	M6	1.23×10^{-3}	0.53	2.05
56	11	45	—	55	5.5	9.5	5.5	—	—	M6	1.23×10^{-3}	0.6	2.05
46	11	35	10	46	5.5	9.5	5.5	36	—	M6	1.23×10^{-3}	0.31	2.06
51	11	40	10	46	5.5	9.5	5.5	36	—	M6	1.23×10^{-3}	0.34	2.06
44	11	33	—	59	5.5	9.5	5.5	—	—	M6	1.23×10^{-3}	0.51	2.12
56	11	45	—	59	5.5	9.5	5.5	—	—	M6	1.23×10^{-3}	0.68	2.12
50	11	39	—	59	5.5	9.5	5.5	—	—	M6	1.23×10^{-3}	0.62	2.12
62	11	51	—	59	5.5	9.5	5.5	—	—	M6	1.23×10^{-3}	0.8	2.12
52	11	41	10	46	5.5	9.5	5.5	36	—	M6	1.23×10^{-3}	0.36	1.93
59	11	48	10	46	5.5	9.5	5.5	36	—	M6	1.23×10^{-3}	0.39	1.93
60	15	45	—	59	5.5	9.5	5.5	—	—	M6	1.23×10^{-3}	0.69	2.06
69	11	58	15	46	5.5	9.5	5.5	36	—	M6	1.23×10^{-3}	0.45	2.06
58	15	43	—	59	5.5	9.5	5.5	—	—	M6	1.23×10^{-3}	0.77	2.14
64	18	46	—	59	5.5	9.5	5.5	—	—	M6	1.23×10^{-3}	0.9	2.19
65	10	47.5	—	50	5.5	—	—	46	5	M6	1.23×10^{-3}	0.49	2.25
45	10	27.5	—	50	5.5	—	—	46	5	M6	1.23×10^{-3}	0.35	2.25
41	10	25	—	47	5.5	—	—	38	5.5	M6	1.23×10^{-3}	0.24	2.34
81	10	65	—	47	5.5	—	—	38	5.5	M6	1.23×10^{-3}	0.48	2.34
60	10	40.1	—	47	5.5	—	—	38	5	M6	1.23×10^{-3}	0.4	2.37

For model number coding, see B15-164.

No Preload Type of Precision Ball Screw

Screw shaft outer diameter	25
Lead	4 to 16

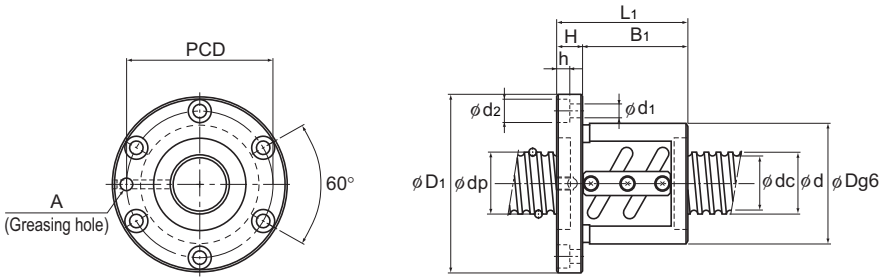

BNF

Screw shaft outer diameter d	Lead Ph	Model No.	Ball center-to-center diameter dp	Thread minor diameter dc	No. of loaded circuits Rows x turns	Basic load rating Ca kN	Basic load rating C_0a kN	Rigidity K N/μm	Outer diameter D	Flange diameter D_1
25	4	BNF 2504-2.5	25.5	22.8	1×2.5	5.2	13.7	210	46	69
		BNF 2504-5	25.5	22.8	2×2.5	9.5	27.3	410	46	69
		DK 2504-3	25.5	22.8	3×1	5.7	15	230	38	63
		DK 2504-4	25.5	22.8	4×1	7.4	19.9	310	38	63
	5	BNF 2505-2.5	25.75	22.2	1×2.5	9.2	22	240	50	73
		BNF 2505-3	25.75	22.2	2×1.5	10.8	26.4	280	50	73
		BNF 2505-3.5	25.75	22.2	1×3.5	12.3	30.7	320	50	73
		BNF 2505-5	25.75	22.2	2×2.5	16.7	44	460	50	73
		DK 2505-3	25.75	22.1	3×1	9.7	22.6	250	40	63
		DK 2505-4	25.75	22.1	4×1	12.4	30.3	320	40	63
	6	BNF 2506-2.5	26	21.4	1×2.5	12.5	27.3	250	53	76
		BNF 2506-3	26	21.4	2×1.5	14.6	32.8	290	53	76
		BNF 2506-3.5	26	21.4	1×3.5	15.1	35.9	330	53	76
		BNF 2506-5	26	21.4	2×2.5	22.5	54.8	470	53	76
		DK 2506-3	26	21.4	3×1	12.8	27	250	40	63
		DK 2506-4	26	21.4	4×1	16.8	37.4	330	40	63
	8	BNF 2508-2.5	26.25	20.5	1×2.5	15.8	32.8	250	58	85
		BNF 2508-3	26.25	20.5	2×1.5	18.5	39.4	290	58	85
		BNF 2508-3.5	26.25	20.5	1×3.5	21.2	46	340	58	85
		BNF 2508-5	26.25	20.5	2×2.5	28.7	65.8	480	58	85
		DK 2508-3	26	21.4	3×1	13.1	28.1	500	40	63
		DK 2508-4	26	21.4	4×1	16.8	37.5	330	40	63
	10	BNF 2510A-2.5	26.3	21.4	1×2.5	15.8	33	250	58	85
		DK 2510-3	26	21.6	3×1	12.7	27	250	40	63
		DK 2510-4	26	21.6	4×1	16.7	37.6	330	40	63
	12	BNF 2512-2.5	26	21.9	1×2.5	12.3	27.6	250	53	76
	16	BNF 2516-1.5	26	21.4	1×1.5	7.9	16.7	150	53	76

Note) The model numbers in dimmed type indicate semi-standard types. If desiring them, contact THK.
These models can be attached with QZ Lubricator or the wiper ring.
For dimensions of the ball screw nut with either accessory being attached, see B15-228.

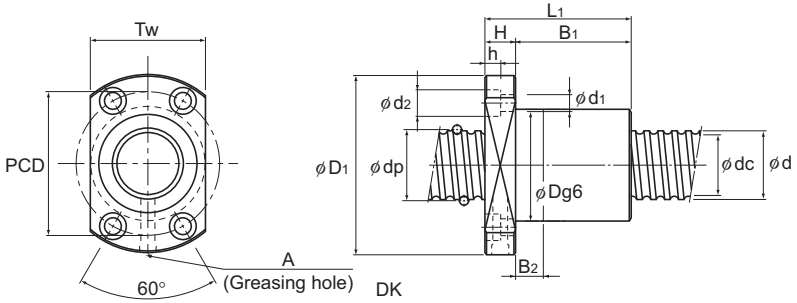

Unit: mm

Nut dimensions											Screw shaft inertial moment/mm	Nut mass	Shaft mass
	Overall length L_1	H	B_1	B_2	PCD	d_1	d_2	h	T_w	Greasing hole A	kg・cm²/mm	kg	kg/m
	36	11	25	—	57	5.5	9.5	5.5	—	M6	3.01×10^{-3}	0.21	3.5
	48	11	37	—	57	5.5	9.5	5.5	—	M6	3.01×10^{-3}	0.55	3.5
	43	11	32	10	51	5.5	9.5	5.5	39	M6	3.01×10^{-3}	0.33	3.5
	47	11	36	10	51	5.5	9.5	5.5	39	M6	3.01×10^{-3}	0.35	3.5
	40	11	29	—	61	5.5	9.5	5.5	—	M6	3.01×10^{-3}	0.52	3.34
	52	11	41	—	61	5.5	9.5	5.5	—	M6	3.01×10^{-3}	0.66	3.34
	45	11	34	—	61	5.5	9.5	5.5	—	M6	3.01×10^{-3}	0.6	3.34
	55	11	44	—	61	5.5	9.5	5.5	—	M6	3.01×10^{-3}	0.68	3.34
	46	11	35	10	51	5.5	9.5	5.5	41	M6	3.01×10^{-3}	0.38	3.35
	51	11	40	10	51	5.5	9.5	5.5	41	M6	3.01×10^{-3}	0.41	3.35
	44	11	33	—	64	5.5	9.5	5.5	—	M6	3.01×10^{-3}	0.61	3.19
	56	11	45	—	64	5.5	9.5	5.5	—	M6	3.01×10^{-3}	0.85	3.19
	50	11	39	—	64	5.5	9.5	5.5	—	M6	3.01×10^{-3}	0.79	3.19
	62	11	51	—	64	5.5	9.5	5.5	—	M6	3.01×10^{-3}	0.91	3.19
	52	11	41	10	51	5.5	9.5	5.5	41	M6	3.01×10^{-3}	0.41	3.19
	60	11	49	10	51	5.5	9.5	5.5	41	M6	3.01×10^{-3}	0.46	3.19
	58	15	43	—	71	6.6	11	6.5	—	M6	3.01×10^{-3}	1.07	3.12
	71	15	56	—	71	6.6	11	6.5	—	M6	3.01×10^{-3}	1.27	3.12
	66	15	51	—	71	6.6	11	6.5	—	M6	3.01×10^{-3}	1.29	3.12
	82	15	67	—	71	6.6	11	6.5	—	M6	3.01×10^{-3}	1.44	3.12
	62	12	50	10	51	5.5	9.5	5.5	41	M6	3.01×10^{-3}	0.48	3.35
	71	12	59	15	51	5.5	9.5	5.5	41	M6	3.01×10^{-3}	0.54	3.35
	70	18	52	—	71	6.6	11	6.5	—	M6	3.01×10^{-3}	1.43	3.27
	80	15	65	15	51	5.5	9.5	5.5	41	M6	3.01×10^{-3}	0.62	3.45
	85	15	70	20	51	5.5	9.5	5.5	41	M6	3.01×10^{-3}	0.65	3.45
	60	11	49	—	64	5.5	9.5	5.5	—	M6	3.01×10^{-3}	0.86	3.51
	60	11	49	—	64	5.5	9.5	5.5	—	M6	3.01×10^{-3}	0.96	3.6

For model number coding, see B15-164.

No Preload Type of Precision Ball Screw

Screw shaft outer diameter	25 to 30
Lead	5 to 90

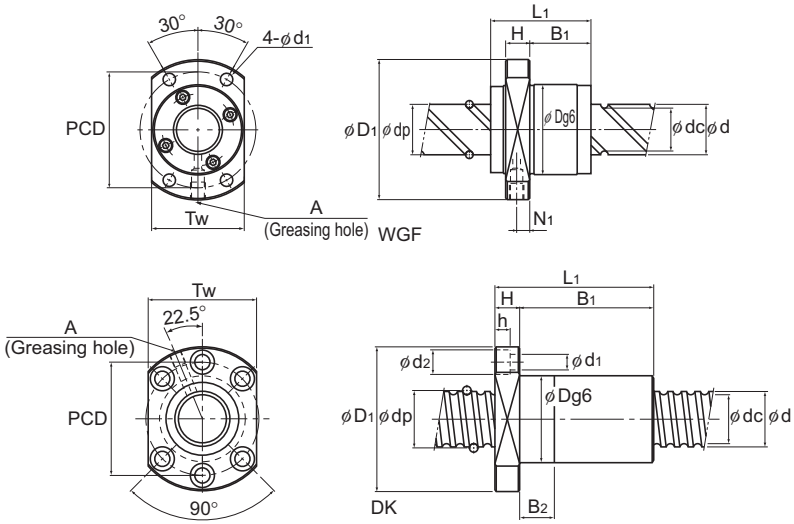

Screw shaft outer diameter d	Lead Ph	Model No.	Ball center-to-center diameter dp	Thread minor diameter dc	No. of loaded circuits Rows x turns	Basic load rating Ca kN	Basic load rating C_0a kN	Rigidity K N/μm	Outer diameter D	Flange diameter D_1
25	25	BLK 2525-2.8	26	21.9	1×2.8	12.2	26.9	270	47	74
		BLK 2525-3.6	26	21.9	2×1.8	16.6	38.7	350	47	74
	50	WGF 2550-1	26	21.9	2×0.65	6.4	12.5	140	45	69
		WGF 2550-3	26	21.9	2×1.65	14.3	31.7	340	45	69
28	5	BNF 2805-2.5	28.75	25.2	1×2.5	9.7	24.6	250	55	85
		BNF 2805-3	28.75	25.2	2×1.5	11.3	29.5	300	55	85
		BNF 2805-3.5	28.75	25.2	1×3.5	12.9	34.4	350	55	85
		BNF 2805-5	28.75	25.2	2×2.5	17.5	49.4	500	55	85
		BNF 2805-7.5	28.75	25.2	3×2.5	24.8	73.8	740	55	85
		DK 2805-3	28.75	25.2	3×1	10.5	26.4	270	43	71
		DK 2805-4	28.75	25.2	4×1	13.4	35.2	360	43	71
	6	BNF 2806-2.5	28.75	25.2	1×2.5	9.6	24.6	250	55	85
		BNF 2806-3.5	28.75	25.2	1×3.5	12.9	34.5	350	55	85
		BNF 2806-5	28.75	25.2	2×2.5	17.5	49.4	500	55	85
		BNF 2806-7.5	28.75	25.2	3×2.5	24.8	73.8	740	55	85
		DK 2806-3	29	24.4	3×1	14	32	280	43	71
		DK 2806-4	29	24.4	4×1	18	42.5	370	43	71
	8	BNF 2808-2.5	29.25	23.6	1×2.5	16.8	36.8	270	60	104
		BNF 2808-3	29.25	23.6	2×1.5	19.6	44.2	320	60	104
		BNF 2808-5	29.25	23.6	2×2.5	30.4	73.7	530	60	104
	10	BNF 2810-2.5	29.75	22.4	1×2.5	24	48.2	280	65	106
		DK 2810-4	29.25	23.6	4×1	22.4	50	370	45	71
30	60	WGF 3060-1	31.25	26.4	2×0.65	8.9	18	170	55	89
		WGF 3060-3	31.25	26.4	2×1.65	19.9	45.7	410	55	89
	90	WGF 3090-1.5	31.25	26.4	2×0.75	9.7	25.8	200	55	89

Note) The model numbers in dimmed type indicate semi-standard types. If desiring them, contact THK.
Model WGF and Large Lead Precision Ball Screw model BLK cannot be attached with seal.

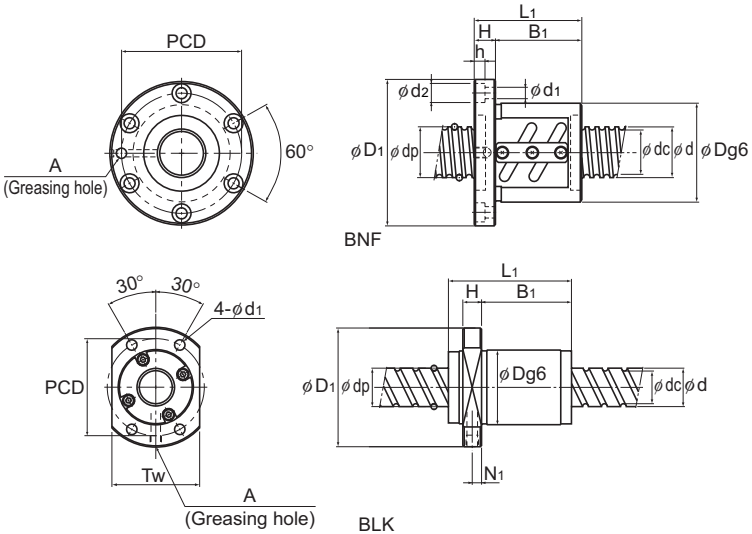

Unit: mm

Nut dimensions												Screw shaft inertial moment/mm	Nut mass	Shaft mass
	Overall length L_1	H	B_1	B_2	PCD	d_1	d_2	h	Tw	N_1	Greasing hole A	kg・cm²/mm	kg	kg/m
	80	12	60	—	60	6.6	—	—	56	6	M6	3.01×10^{-3}	0.89	3.52
	55	12	35	—	60	6.6	—	—	56	6	M6	3.01×10^{-3}	0.64	3.52
	52	12	31.5	—	57	6.6	—	—	46	7	M6	3.01×10^{-3}	0.43	3.66
	102	12	81.5	—	57	6.6	—	—	46	7	M6	3.01×10^{-3}	0.85	3.66
	44	12	32	—	69	6.6	11	6.5	—	—	M6	4.74×10^{-3}	1.02	4.27
	54	12	42	—	69	6.6	11	6.5	—	—	M6	4.74×10^{-3}	0.92	4.27
	49	12	37	—	69	6.6	11	6.5	—	—	M6	4.74×10^{-3}	0.86	4.27
	59	12	47	—	69	6.6	11	6.5	—	—	M6	4.74×10^{-3}	1.06	4.27
	74	12	62	—	69	6.6	11	6.5	—	—	M6	4.74×10^{-3}	1.16	4.27
	49	12	37	10	57	6.6	11	6.5	55	—	M6	4.74×10^{-3}	0.48	4.27
	54	12	42	10	57	6.6	11	6.5	55	—	M6	4.74×10^{-3}	0.51	4.27
	50	12	38	—	69	6.6	11	6.5	—	—	M6	4.74×10^{-3}	0.87	4.36
	56	12	44	—	69	6.6	11	6.5	—	—	M6	4.74×10^{-3}	0.94	4.36
	68	12	56	—	69	6.6	11	6.5	—	—	M6	4.74×10^{-3}	1.09	4.36
	86	12	74	—	69	6.6	11	6.5	—	—	M6	4.74×10^{-3}	1.3	4.36
	53	12	41	10	57	6.6	11	6.5	55	—	M6	4.74×10^{-3}	0.5	4.36
	61	12	49	10	57	6.6	11	6.5	55	—	M6	4.74×10^{-3}	0.56	4.36
	68	18	50	—	82	11	17.5	11	—	—	M6	4.74×10^{-3}	1.75	4.02
	80	18	62	—	82	11	17.5	11	—	—	M6	4.74×10^{-3}	1.93	4.02
	92	18	74	—	82	11	17.5	11	—	—	M6	4.74×10^{-3}	2.11	4.02
	86	18	68	—	85	11	17.5	11	—	—	M6	4.74×10^{-3}	2.3	3.66
	84	15	69	20	57	6.6	11	6.5	55	—	M6	4.74×10^{-3}	0.82	4.18
	62	15	37	—	71	9	—	—	56	9	M6	6.24×10^{-3}	1.11	5.28
	122	15	97	—	71	9	—	—	56	9	M6	6.24×10^{-3}	1.9	5.28
	92	15	61.3	—	71	9	—	—	56	9	M6	6.24×10^{-3}	1.51	5.34

For model number coding, see B15-164.

No Preload Type of Precision Ball Screw

Screw shaft outer diameter	32
Lead	4 to 12

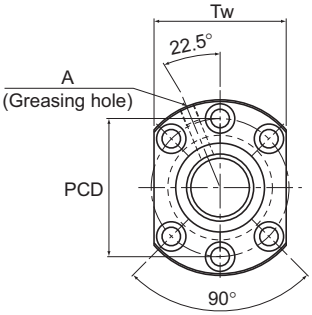

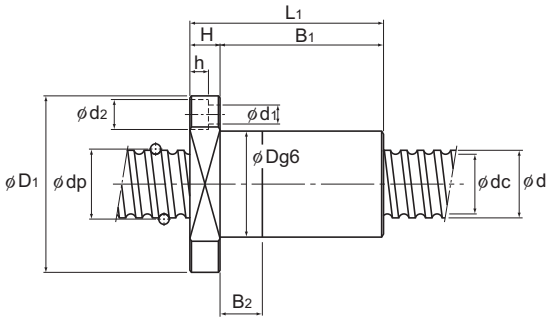

DK

Screw shaft outer diameter d	Lead Ph	Model No.	Ball center-to-center diameter dp	Thread minor diameter dc	No. of loaded circuits Rows x turns	Basic load rating Ca kN	Basic load rating C₀a kN	Rigidity K N/μm	Outer diameter D	Flange diameter D₁
32	4	BNF 3204-7.5	32.5	30	3×2.5	14.8	52.7	740	54	81
		DK 3204-3	32.5	30.1	3×1	6.4	19.6	290	45	76
		DK 3204-4	32.5	30.1	4×1	8.2	26.1	380	45	76
	5	○ BNF 3205-2.5	32.75	29.2	1×2.5	10.2	28.1	280	58	85
		○ BNF 3205-3	32.75	29.2	2×1.5	12	33.8	340	58	85
		○ BNF 3205-4.5	32.75	29.2	3×1.5	17	50.7	500	58	85
		○ BNF 3205-5	32.75	29.2	2×2.5	18.5	56.4	560	58	85
		○ BNF 3205-7.5	32.75	29.2	3×2.5	26.3	84.5	810	58	85
		DK 3205-3	32.75	29.2	3×1	11.1	30.2	300	46	76
		DK 3205-4	32.75	29.2	4×1	14.2	40.3	400	46	76
		DK 3205-6	32.75	29.2	6×1	20.1	60.4	600	46	76
	6	○ BNF 3206-2.5	33	28.4	1×2.5	13.9	35.2	290	62	89
		○ BNF 3206-3	33	28.4	2×1.5	16.3	42.2	350	62	89
		○ BNF 3206-5	33	28.4	2×2.5	25.2	70.4	580	62	89
		DK 3206-3	33	28.4	3×1	14.9	37.1	310	48	76
		DK 3206-4	33	28.4	4×1	19.1	49.5	410	48	76
	8	○ BNF 3208A-2.5	33.25	27.5	1×2.5	17.8	42.2	300	66	100
		○ BNF 3208A-3	33.25	27.5	2×1.5	20.9	50.7	360	66	100
		○ BNF 3208A-4.5	33.25	27.5	3×1.5	29.5	76	530	66	100
		○ BNF 3208A-5	33.25	27.5	2×2.5	32.3	84.4	590	66	100
	10	○ BNF 3210A-2.5	33.75	26.4	1×2.5	26.1	56.2	310	74	108
		○ BNF 3210A-3	33.75	26.4	2×1.5	30.5	67.4	380	74	108
		○ BNF 3210A-3.5	33.75	26.4	1×3.5	34.8	78.6	440	74	108
		○ BNF 3210A-5	33.75	26.4	2×2.5	47.2	112.7	620	74	108
		DK 3210-3	33.75	26.4	3×1	25.7	52.2	300	54	87
		DK 3210-4	33.75	26.4	4×1	33	69.7	390	54	87
	12	○ BNF 3212-3.5	34	26.1	1×3.5	40.4	88.5	440	76	121
		DK 3212-4	33.75	26.4	4×1	34.2	73.9	420	54	87

Note) The model numbers in dimmed type indicate semi-standard types. If desiring them, contact THK.
Those models marked with ○ can be attached with QZ Lubricator or the wiper ring.
For dimensions of the ball screw nut with either accessory being attached, see B15-228.

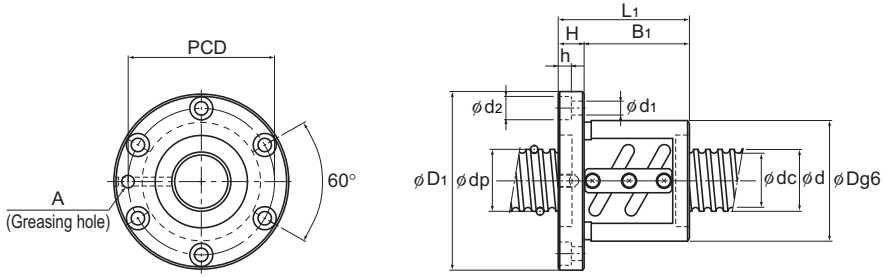

BNF

Unit: mm

Nut dimensions											Screw shaft inertial moment/mm	Nut mass	Shaft mass
	Overall length L_1	H	B_1	B_2	PCD	d_1	d_2	h	Tw	Greasing hole A	kg・cm²/mm	kg	kg/m
	60	11	49	—	67	6.6	11	6.5	—	M6	8.08×10^{-3}	0.81	5.86
	44	11	33	10	63	6.6	11	6.5	59	M6	8.08×10^{-3}	0.44	5.86
	48	11	37	10	63	6.6	11	6.5	59	M6	8.08×10^{-3}	0.47	5.86
	41	12	29	—	71	6.6	11	6.5	—	M6	8.08×10^{-3}	0.76	5.67
	53	12	41	—	71	6.6	11	6.5	—	M6	8.08×10^{-3}	0.91	5.67
	63	12	51	—	71	6.6	11	6.5	—	M6	8.08×10^{-3}	1.03	5.67
	56	12	44	—	71	6.6	11	6.5	—	M6	8.08×10^{-3}	0.94	5.67
	71	12	59	—	71	6.6	11	6.5	—	M6	8.08×10^{-3}	1.13	5.67
	47	12	35	10	63	6.6	11	6.5	59	M6	8.08×10^{-3}	0.5	5.67
	52	12	40	10	63	6.6	11	6.5	59	M6	8.08×10^{-3}	0.53	5.67
	62	12	50	10	63	6.6	11	6.5	59	M6	8.08×10^{-3}	0.6	5.67
	45	12	33	—	75	6.6	11	6.5	—	M6	8.08×10^{-3}	0.94	5.47
	57	12	45	—	75	6.6	11	6.5	—	M6	8.08×10^{-3}	1.12	5.47
	63	12	51	—	75	6.6	11	6.5	—	M6	8.08×10^{-3}	1.21	5.47
	53	12	41	10	63	6.6	11	6.5	59	M6	8.08×10^{-3}	0.58	6.31
	61	12	49	10	63	6.6	11	6.5	59	M6	8.08×10^{-3}	0.65	6.31
	58	15	43	—	82	9	14	8.5	—	M6	8.08×10^{-3}	1.5	5.39
	71	15	56	—	82	9	14	8.5	—	M6	8.08×10^{-3}	1.73	5.39
	87	15	72	—	82	9	14	8.5	—	M6	8.08×10^{-3}	2.02	5.39
	82	15	67	—	82	9	14	8.5	—	M6	8.08×10^{-3}	1.93	5.39
	70	15	55	—	90	9	14	8.5	—	M6	8.08×10^{-3}	2.2	4.98
	87	15	72	—	90	9	14	8.5	—	M6	8.08×10^{-3}	2.6	4.98
	80	15	65	—	90	9	14	8.5	—	M6	8.08×10^{-3}	2.44	4.98
	100	15	85	—	90	9	14	8.5	—	M6	8.08×10^{-3}	2.92	4.98
	80	15	65	15	69	9	14	8.5	66	M6	8.08×10^{-3}	1.22	4.98
	90	15	75	20	69	9	14	8.5	66	M6	8.08×10^{-3}	1.34	4.98
	98	18	80	—	98	11	17.5	11	—	M6	8.08×10^{-3}	3.4	4.9
	98	15	83	25	69	9	14	8.5	66	M6	8.08×10^{-3}	1.43	5.2

For model number coding, see B15-164.

No Preload Type of Precision Ball Screw

Screw shaft outer diameter	32 to 36
Lead	6 to 36

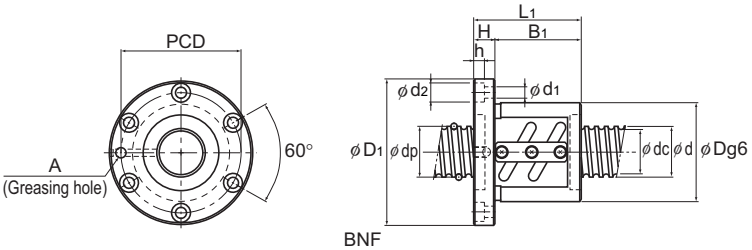

Screw shaft outer diameter d	Lead Ph	Model No.	Ball center-to-center diameter dp	Thread minor diameter dc	No. of loaded circuits Rows x turns	Basic load rating Ca kN	Basic load rating C_0a kN	Rigidity K N/μm	Outer diameter D	Flange diameter D_1
32	32	BLK 3232-2.8	33.25	28.3	1×2.8	17.3	41.4	340	58	92
		BLK 3232-3.6	33.25	28.3	2×1.8	23.7	59.5	440	58	92
36	6	○ BNF 3606-2.5	36.75	33.2	1×2.5	10.7	31.8	310	65	100
		○ BNF 3606-3	36.75	33.2	2×1.5	12.5	38	370	65	100
		○ BNF 3606-5	36.75	33.2	2×2.5	19.4	63.4	610	65	100
		○ BNF 3606-7.5	36.75	33.2	3×2.5	27.5	95.2	890	65	100
	8	○ BNF 3608-2.5	37.25	31.6	1×2.5	18.8	47.5	330	70	114
		○ BNF 3608-5	37.25	31.6	2×2.5	34.1	95.1	650	70	114
		○ BNF 3608-7.5	37.25	31.6	3×2.5	48.3	142.1	950	70	114
	10	○ BNF 3610-2.5	37.75	30.5	1×2.5	27.6	63.3	350	75	120
		○ BNF 3610-5	37.75	30.5	2×2.5	50.1	126.4	680	75	120
		○ BNF 3610-7.5	37.75	30.5	3×2.5	71.1	190.1	990	75	120
		DK 3610-3	37.75	30.5	3×1	28.8	63.8	350	58	98
		DK 3610-4	37.75	30.5	4×1	36.8	85	470	58	98
	12	○ BNF 3612-2.5	38	30.1	1×2.5	32.1	71.4	350	78	123
		○ BNF 3612-5	38	30.1	2×2.5	58.4	142.1	690	78	123
	16	○ BNF 3616-2.5	38	30.1	1×2.5	32.1	71.4	350	78	123
	20	○ BNF 3620-1.5	37.75	30.5	1×1.5	17.6	38.3	220	70	103
		BLK 3620-5.6	37.75	31.2	2×2.8	54.9	134.3	760	70	110
	24	BLK 3624-5.6	38	30.7	2×2.8	63.8	151.9	770	75	115
	36	BLK 3636-2.8	37.4	31.7	1×2.8	22.4	54.1	390	66	106
		BLK 3636-3.6	37.4	31.7	2×1.8	30.8	78	490	66	106

Note) The model numbers in dimmed type indicate semi-standard types. If desiring them, contact THK.
Those models marked with ○ can be attached with QZ Lubricator or the wiper ring.
For dimensions of the ball screw nut with either accessory being attached, see B15-228.
Large Lead Precision Ball Screw model BLK cannot be attached with seal.

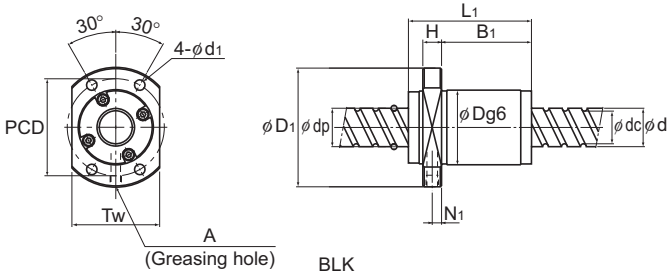

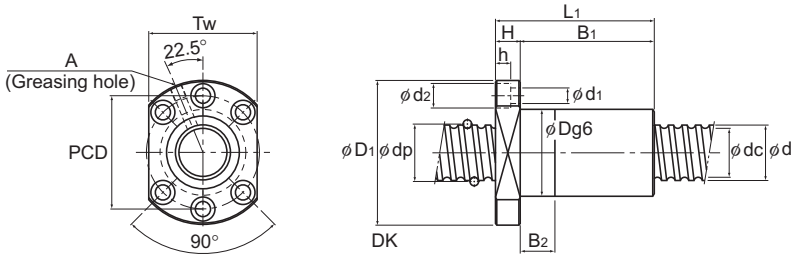

Unit: mm

Nut dimensions											Screw shaft inertial moment/mm	Nut mass	Shaft mass
Overall length L_1	H	B_1	B_2	PCD	d_1	d_2	h	Tw	N_1	Greasing hole A	kg・cm²/mm	kg	kg/m
102	15	77	—	74	9	—	—	68	7.5	M6	8.08×10^{-3}	1.78	5.83
70	15	45	—	74	9	—	—	68	7.5	M6	8.08×10^{-3}	1.32	5.83
53	15	38	—	82	9	14	8.5	—	—	M6	1.29×10^{-2}	1.29	7.39
62	15	47	—	82	9	14	8.5	—	—	M6	1.29×10^{-2}	1.43	7.39
71	15	56	—	82	9	14	8.5	—	—	M6	1.29×10^{-2}	1.57	7.39
89	15	74	—	82	9	14	8.5	—	—	M6	1.29×10^{-2}	1.85	7.39
68	18	50	—	92	11	17.5	11	—	—	M6	1.29×10^{-2}	2.11	6.96
92	18	74	—	92	11	17.5	11	—	—	M6	1.29×10^{-2}	2.57	6.96
116	18	98	—	92	11	17.5	11	—	—	M6	1.29×10^{-2}	3.03	6.96
81	18	63	—	98	11	17.5	11	—	—	M6	1.29×10^{-2}	2.75	6.51
111	18	93	—	98	11	17.5	11	—	—	M6	1.29×10^{-2}	3.45	6.51
141	18	123	—	98	11	17.5	11	—	—	M6	1.29×10^{-2}	4.15	6.51
82	18	64	15	77	11	17.5	11	75	—	M6	1.29×10^{-2}	1.52	6.51
93	18	75	20	77	11	17.5	11	75	—	M6	1.29×10^{-2}	1.66	6.51
87	18	69	—	100	11	17.5	11	—	—	M6	1.29×10^{-2}	3.14	6.41
123	18	105	—	100	11	17.5	11	—	—	M6	1.29×10^{-2}	4.07	6.41
92	18	74	—	100	11	17.5	11	—	—	M6	1.29×10^{-2}	3.27	6.8
75	15	60	—	85	9	14	8.5	—	—	M6	1.29×10^{-2}	1.91	7.24
78	17	45	—	90	11	—	—	80	8.5	M6	1.29×10^{-2}	2.23	6.49
94	18	59	—	94	11	—	—	86	9	M6	1.29×10^{-2}	3.05	6.39
113	17	86	—	85	11	—	—	76	8.5	M6	1.29×10^{-2}	2.61	7.34
77	17	50	—	85	11	—	—	76	8.5	M6	1.29×10^{-2}	1.93	7.34

For model number coding, see B15-164.

No Preload Type of Precision Ball Screw

Screw shaft outer diameter	40
Lead	5 to 10

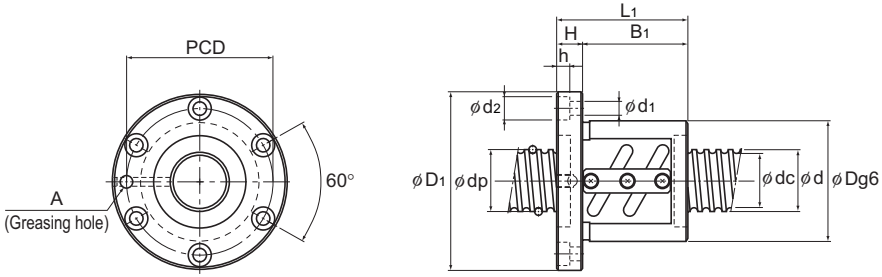

BNF

Screw shaft outer diameter d	Lead Ph	Model No.	Ball center-to-center diameter dp	Thread minor diameter dc	No. of loaded circuits Rows x turns	Basic load rating Ca kN	Basic load rating C_0a kN	Rigidity K N/μm	Outer diameter D	Flange diameter D_1
40	5	BNF 4005-3	40.75	37.2	2×1.5	13	42.3	400	67	101
		BNF 4005-4.5	40.75	37.2	3×1.5	18.5	63.5	600	67	101
		BNF 4005-6	40.75	37.2	4×1.5	23.7	84.7	780	67	101
	6	BNF 4006-2.5	41	36.4	1×2.5	15.3	44.1	350	70	104
		BNF 4006-5	41	36.4	2×2.5	27.7	88.1	690	70	104
		BNF 4006-7.5	41	36.4	3×2.5	39.2	132.3	1010	70	104
	8	BNF 4008-2.5	41.25	35.5	1×2.5	19.6	52.8	360	74	108
		BNF 4008-3	41.25	35.5	2×1.5	22.9	63.4	430	74	108
		BNF 4008-5	41.25	35.5	2×2.5	35.7	105.8	710	74	108
	10	BNF 4010-2.5	41.75	34.4	1×2.5	29	70.4	380	82	124
		BNF 4010-3	41.75	34.4	2×1.5	33.8	84.5	450	82	124
		BNF 4010-3.5	41.75	34.4	1×3.5	38.8	99	520	82	124
		BNF 4010-5	41.75	34.4	2×2.5	52.7	141.1	740	82	124
		DK 4010-3	41.75	34.4	3×1	29.8	69.3	380	62	104
		DK 4010-4	41.75	34.4	4×1	38.1	92.4	500	62	104

Note) The model numbers in dimmed type indicate semi-standard types. If desiring them, contact THK.
These models can be attached with QZ Lubricator or the wiper ring.
For dimensions of the ball screw nut with either accessory being attached, see B15-228.

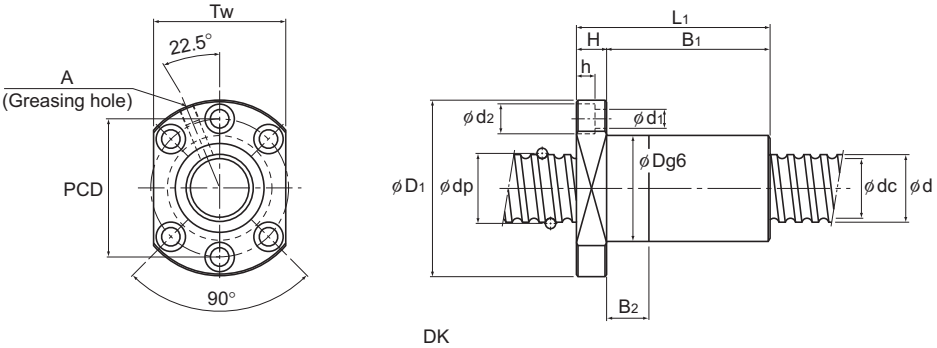

Unit: mm

Nut dimensions											Screw shaft inertial moment/mm	Nut mass	Shaft mass
	Overall length L_1	H	B_1	B_2	PCD	d_1	d_2	h	Tw	Greasing hole A	kg・cm²/mm	kg	kg/m
	56	15	41	—	83	9	14	8.5	—	M6	1.97×10^{-2}	1.31	9.06
	66	15	51	—	83	9	14	8.5	—	M6	1.97×10^{-2}	1.46	9.06
	81	15	66	—	83	9	14	8.5	—	M6	1.97×10^{-2}	1.69	9.06
	48	15	33	—	86	9	14	8.5	—	M6	1.97×10^{-2}	1.32	8.82
	66	15	51	—	86	9	14	8.5	—	M6	1.97×10^{-2}	1.63	8.82
	84	15	69	—	86	9	14	8.5	—	M6	1.97×10^{-2}	1.94	8.82
	58	15	43	—	90	9	14	8.5	—	M6	1.97×10^{-2}	1.7	8.72
	71	15	56	—	90	9	14	8.5	—	M6	1.97×10^{-2}	1.97	8.72
	82	15	67	—	90	9	14	8.5	—	M6	1.97×10^{-2}	2.19	8.72
	73	18	55	—	102	11	17.5	11	—	M6	1.97×10^{-2}	2.86	8.22
	90	18	72	—	102	11	17.5	11	—	M6	1.97×10^{-2}	3.33	8.22
	83	18	65	—	102	11	17.5	11	—	M6	1.97×10^{-2}	3.14	8.22
	103	18	85	—	102	11	17.5	11	—	M6	1.97×10^{-2}	3.69	8.22
	83	18	65	15	82	11	17.5	11	79	PT 1/8	1.97×10^{-2}	3.14	8.22
	93	18	75	20	82	11	17.5	11	79	PT 1/8	1.97×10^{-2}	3.41	8.22

For model number coding, see B15-164.

No Preload Type of Precision Ball Screw

Screw shaft outer diameter	40
Lead	12 to 40

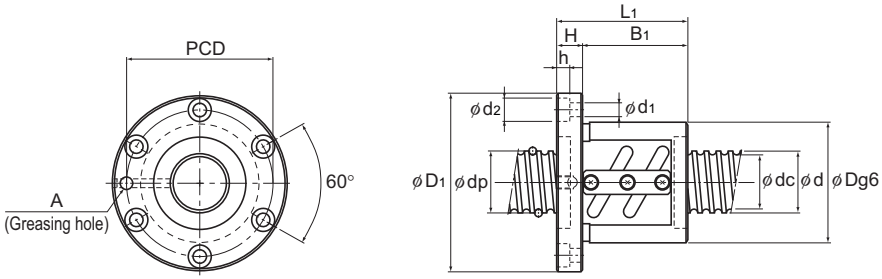

BNF

Screw shaft outer diameter d	Lead Ph	Model No.	Ball center-to-center diameter dp	Thread minor diameter dc	No. of loaded circuits Rows x turns	Basic load rating Ca kN	Basic load rating C₀a kN	Rigidity K N/μm	Outer diameter D	Flange diameter D₁
40	12	○ BNF 4012-2.5	42	34.1	1×2.5	33.9	79.2	390	84	126
		○ BNF 4012-3.5	42	34.1	1×3.5	45.4	110.7	530	84	126
		○ BNF 4012-5	42	34.1	2×2.5	61.6	158.3	750	84	126
		○ DK 4012-3	41.75	34.4	3×1	30.6	72.3	390	62	104
		○ DK 4012-4	41.75	34.4	4×1	39.2	96.4	520	62	104
	16	○ BNF 4016-5	42	34.1	2×2.5	61.4	158.8	740	84	126
		○ DK 4016-4	41.75	34.4	4×1	39.1	96.8	520	62	104
	20	○ DK 4020-3	41.75	34.7	3×1	29.4	69.3	750	62	104
	40	BLK 4040-2.8	41.75	35.2	1×2.8	28.2	68.9	430	73	114
		BLK 4040-3.6	41.75	35.2	2×1.8	38.7	99.2	550	73	114

Note) The model numbers in dimmed type indicate semi-standard types. If desiring them, contact THK.
Those models marked with ○ can be attached with QZ Lubricator or the wiper ring.
For dimensions of the ball screw nut with either accessory being attached, see B15-228.
Large Lead Precision Ball Screw model BLK cannot be attached with seal.

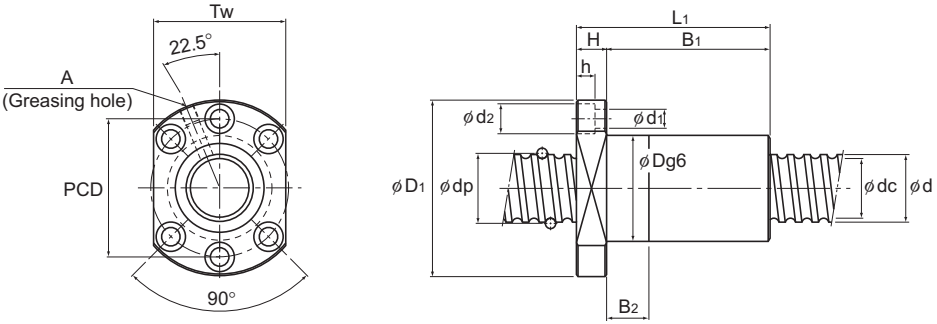

DK

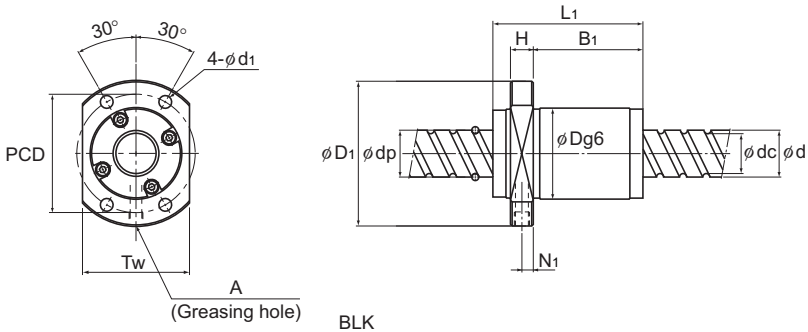

BLK

Unit: mm

Nut dimensions											Screw shaft inertial moment/mm	Nut mass	Shaft mass
Overall length L_1	H	B_1	B_2	PCD	d_1	d_2	h	Tw	N_1	Greasing hole A	kg・cm²/mm	kg	kg/m
83	18	65	—	104	11	17.5	11	—	—	M6	1.97×10^{-2}	3.31	8.12
95	18	77	—	104	11	17.5	11	—	—	M6	1.97×10^{-2}	3.66	8.12
119	18	101	—	104	11	17.5	11	—	—	M6	1.97×10^{-2}	4.36	8.12
90	18	72	20	82	11	17.5	11	79	—	PT 1/8	1.97×10^{-2}	1.77	8.5
103	18	85	25	82	11	17.5	11	79	—	PT 1/8	1.97×10^{-2}	1.95	8.5
152	22	130	—	104	11	17.5	11	—	—	M6	1.97×10^{-2}	5.52	8.55
120	18	102	30	82	11	17.5	11	79	—	PT 1/8	1.97×10^{-2}	2.19	8.83
123	18	105	30	82	11	17.5	11	79	—	PT 1/8	1.97×10^{-2}	2.23	9.03
125	17	96.5	—	93	11	—	—	84	8.5	M6	1.97×10^{-2}	3.4	9.01
85	17	56.5	—	93	11	—	—	84	8.5	M6	1.97×10^{-2}	2.48	9.01

For model number coding, see B15-164.

No Preload Type of Precision Ball Screw

Screw shaft outer diameter	40 to 45
Lead	6 to 80

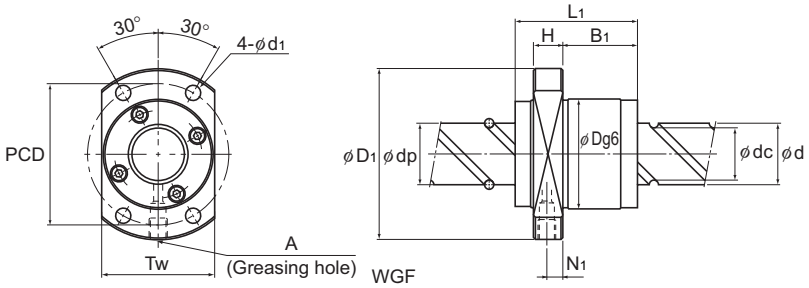

Screw shaft outer diameter d	Lead Ph	Model No.	Ball center-to-center diameter dp	Thread minor diameter dc	No. of loaded circuits Rows x turns	Basic load rating Ca kN	Basic load rating C_0a kN	Rigidity K N/μm	Outer diameter D	Flange diameter D_1
40	80	WGF 4080-1	41.75	35.2	2×0.65	15	32.1	220	73	114
		WGF 4080-3	41.75	35.2	2×1.65	33.4	81.4	530	73	114
45	6	BNF 4506A-2.5	46	41.4	1×2.5	16	49.6	390	80	114
		BNF 4506A-5	46	41.4	2×2.5	29	99	750	80	114
		BNF 4506A-7.5	46	41.4	3×2.5	41.2	150	1100	80	114
	8	BNF 4508-2.5	46.25	40.6	1×2.5	20.7	59.5	400	85	127
		BNF 4508-5	46.25	40.6	2×2.5	37.4	118.6	770	85	127
		BNF 4508-7.5	46.25	40.6	3×2.5	53.1	178.4	1140	85	127
	10	BNF 4510-2.5	46.75	39.5	1×2.5	30.7	79.3	420	88	132
		BNF 4510-3	46.75	39.5	2×1.5	35.9	95.2	500	88	132
		BNF 4510-5	46.75	39.5	2×2.5	55.6	158.8	800	88	132
		BNF 4510-7.5	46.75	39.5	3×2.5	78.8	238.1	1190	88	132
	12	BNF 4512-5	47	39.2	2×2.5	65.2	178.4	820	90	130
	20	BNF 4520-1.5	47.7	37.9	1×1.5	44.2	99	350	98	142

Note) The model numbers in dimmed type indicate semi-standard types.
If desiring them, contact THK.
Model WGF cannot be attached with seal.

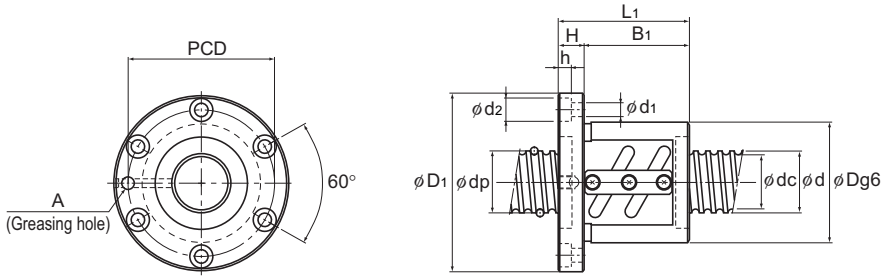

BNF

Unit: mm

Nut dimensions											Screw shaft inertia moment/mm	Nut mass	Shaft mass
	Overall length L_1	H	B_1	PCD	d_1	d_2	h	Tw	N_1	Greasing hole A	kg・cm²/mm	kg	kg/m
	79	17	50.5	93	11	—	—	74	8.5	M6	1.97×10^{-2}	2.34	9.38
	159	17	130.5	93	11	—	—	74	8.5	M6	1.97×10^{-2}	4.18	9.38
	53	15	38	96	9	14	8.5	—	—	PT 1/8	3.16×10^{-2}	1.76	11.31
	71	15	56	96	9	14	8.5	—	—	PT 1/8	3.16×10^{-2}	2.18	11.31
	89	15	74	96	9	14	8.5	—	—	PT 1/8	3.16×10^{-2}	2.59	11.31
	68	18	50	105	11	17.5	11	—	—	PT 1/8	3.16×10^{-2}	2.76	11.21
	92	18	74	105	11	17.5	11	—	—	PT 1/8	3.16×10^{-2}	3.42	11.21
	116	18	98	105	11	17.5	11	—	—	PT 1/8	3.16×10^{-2}	4.09	11.21
	81	18	63	110	11	17.5	11	—	—	PT 1/8	3.16×10^{-2}	3.43	10.65
	94	18	76	110	11	17.5	11	—	—	PT 1/8	3.16×10^{-2}	3.83	10.65
	111	18	93	110	11	17.5	11	—	—	PT 1/8	3.16×10^{-2}	4.35	10.65
	141	18	123	110	11	17.5	11	—	—	PT 1/8	3.16×10^{-2}	5.26	10.65
	119	18	101	110	11	17.5	11	—	—	PT 1/8	3.16×10^{-2}	4.74	10.54
	95	20	75	120	11	17.5	11	—	—	PT 1/8	3.16×10^{-2}	5.04	10.37

For model number coding, see B15-164.

No Preload Type of Precision Ball Screw

Screw shaft outer diameter	50
Lead	5 to 10

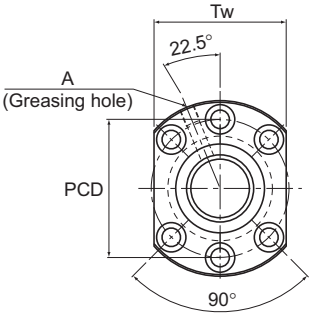

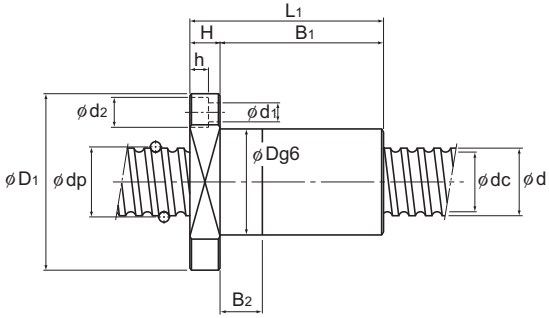

DK

Screw shaft outer diameter d	Lead Ph	Model No.	Ball center-to-center diameter dp	Thread minor diameter dc	No. of loaded circuits Rows x turns	Basic load rating Ca kN	Basic load rating C_0a kN	Rigidity K N/μm	Outer diameter D	Flange diameter D_1
50	5	○ BNF 5005-4.5	50.75	47.2	3×1.5	20.2	79.5	710	80	114
	8	○ BNF 5008-2.5	51.25	45.5	1×2.5	21.6	66.2	430	87	129
		○ BNF 5008-5	51.25	45.5	2×2.5	39.1	132.3	840	87	129
		○ BNF 5008-7.5	51.25	45.5	3×2.5	55.4	198.9	1230	87	129
	10	○ BNF 5010-2.5	51.75	44.4	1×2.5	32	88.2	450	93	135
		○ BNF 5010-3	51.75	44.4	2×1.5	37.5	105.8	540	93	135
		○ BNF 5010-3.5	51.75	44.4	1×3.5	42.8	123.5	620	93	135
		○ BNF 5010-5	51.75	44.4	2×2.5	58.2	176.4	880	93	135
		○ BNF 5010-7.5	51.75	44.4	3×2.5	82.5	264.6	1290	93	135
		DK 5010-3	51.75	44.4	3×1	33.9	90.7	470	72	123
		DK 5010-4	51.75	44.4	4×1	43.4	120.5	610	72	123
		DK 5010-6	51.75	44.4	6×1	62.7	186.8	930	72	123

Note) The model numbers in dimmed type indicate semi-standard types.
If desiring them, contact THK.
Those models marked with ○ can be attached with QZ Lubricator or the wiper ring.
For dimensions of the ball screw nut with either accessory being attached, see B15-228.

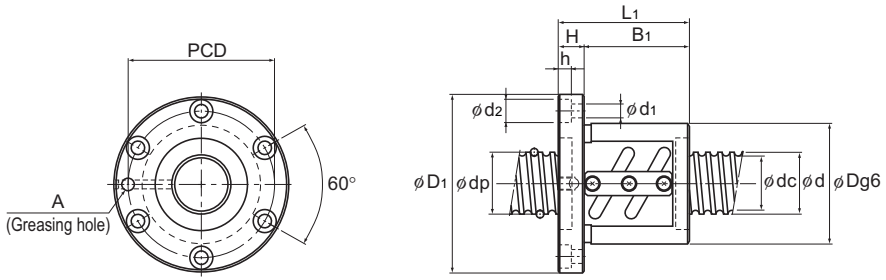

BNF

Unit: mm

Nut dimensions											Screw shaft inertial moment/mm	Nut mass	Shaft mass
	Overall length L_1	H	B_1	B_2	PCD	d_1	d_2	h	Tw	Greasing hole A	kg·cm²/mm	kg	kg/m
	68	15	53	—	96	9	14	8.5	—	PT 1/8	4.82×10^{-2}	1.91	14.4
	61	18	43	—	107	11	17.5	11	—	PT 1/8	4.82×10^{-2}	2.52	14.0
	85	18	67	—	107	11	17.5	11	—	PT 1/8	4.82×10^{-2}	3.16	14.0
	109	18	91	—	107	11	17.5	11	—	PT 1/8	4.82×10^{-2}	3.8	14.0
	73	18	55	—	113	11	17.5	11	—	PT 1/8	4.82×10^{-2}	3.33	13.38
	90	18	72	—	113	11	17.5	11	—	PT 1/8	4.82×10^{-2}	3.88	13.38
	83	18	65	—	113	11	17.5	11	—	PT 1/8	4.82×10^{-2}	3.66	13.38
	103	18	85	—	113	11	17.5	11	—	PT 1/8	4.82×10^{-2}	4.31	13.38
	133	18	115	—	113	11	17.5	11	—	PT 1/8	4.82×10^{-2}	5.28	13.38
	83	18	65	15	101	11	17.5	11	92	PT 1/8	4.82×10^{-2}	2.14	13.38
	93	18	75	20	101	11	17.5	11	92	PT 1/8	4.82×10^{-2}	2.3	13.38
	114	18	96	30	101	11	17.5	11	92	PT 1/8	4.82×10^{-2}	2.65	13.38

For model number coding, see B15-164.

No Preload Type of Precision Ball Screw

Screw shaft outer diameter	50
Lead	12 to 50

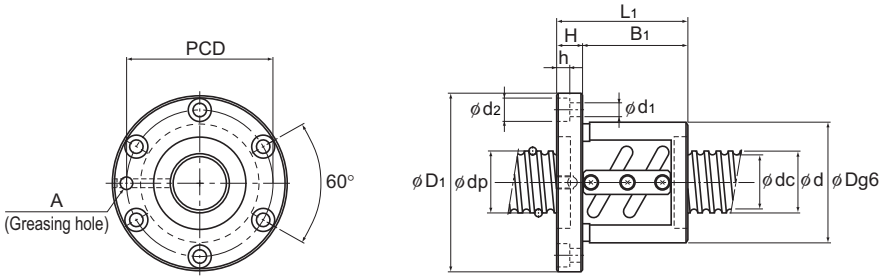

BNF

Screw shaft outer diameter d	Lead Ph	Model No.	Ball center-to-center diameter dp	Thread minor diameter dc	No. of loaded circuits Rows x turns	Basic load rating Ca kN	Basic load rating C0a kN	Rigidity K N/μm	Outer diameter D	Flange diameter D1
50	12	DK 5012-3	52.25	43.3	3×1	45.8	113	490	75	129
		DK 5012-4	52.25	43.3	4×1	58.6	150.6	640	75	129
		○ BNF 5012-2.5	52.25	43.3	1×2.5	43.4	109.8	470	100	146
		○ BNF 5012-3.5	52.25	43.3	1×3.5	58	153.9	640	100	146
		○ BNF 5012-5	52.25	43.3	2×2.5	78.8	220.5	910	100	146
	16	DK 5016-3	52.25	43.3	3×1	45.7	113.3	490	75	129
		DK 5016-4	52.25	43.3	4×1	58.5	151	640	75	129
		○ BNF 5016-2.5	52.7	42.9	1×2.5	72.6	183.3	620	105	152
		○ BNF 5016-5	52.7	42.9	2×2.5	132.3	366.5	1180	105	152
	20	DK 5020-3	52.25	43.6	3×1	44.2	108.8	470	75	129
		○ BNF 5020-2.5	52.7	42.9	1×2.5	72.5	183.3	620	105	152
	50	BLK 5050-2.8	52.2	44.1	1×2.8	42.2	107.8	530	90	135
		BLK 5050-3.6	52.2	44.1	2×1.8	57.8	155	670	90	135

Note) The model numbers in dimmed type indicate semi-standard types. If desiring them, contact THK.
Those models marked with ○ can be attached with QZ Lubricator or the wiper ring.
For dimensions of the ball screw nut with either accessory being attached, see B15-228.
Large Lead Precision Ball Screw model BLK cannot be attached with seal.

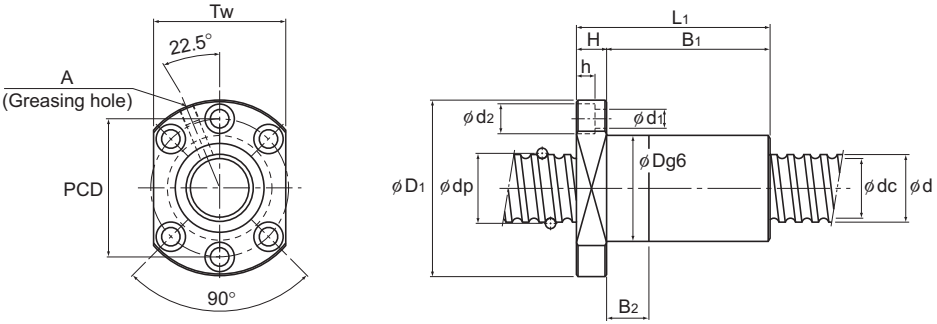

DK

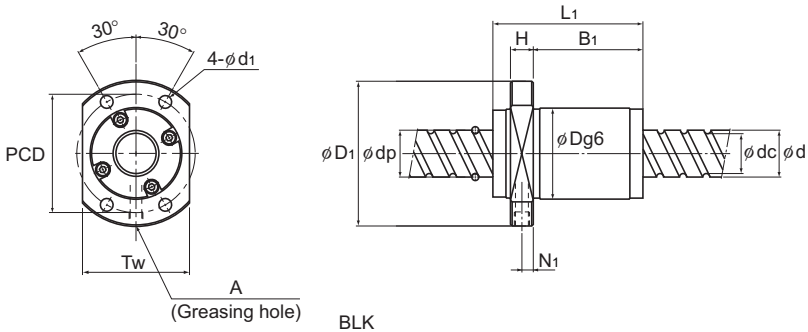

BLK

Unit: mm

Nut dimensions											Screw shaft inertial moment/mm	Nut mass	Shaft mass
Overall length L_1	H	B_1	B_2	PCD	d_1	d_2	h	Tw	N_1	Greasing hole A	kg・cm²/mm	kg	kg/m
97	22	75	20	105	14	20	13	98	—	PT 1/8	4.82×10^{-2}	2.91	12.74
110	22	88	25	105	14	20	13	98	—	PT 1/8	4.82×10^{-2}	3.16	12.74
87	22	65	—	122	14	20	13	—	—	PT 1/8	4.82×10^{-2}	4.57	12.74
99	22	77	—	122	14	20	13	—	—	PT 1/8	4.82×10^{-2}	5.05	12.74
123	22	101	—	122	14	20	13	—	—	PT 1/8	4.82×10^{-2}	6.02	12.74
111	22	89	25	105	14	20	13	98	—	PT 1/8	4.82×10^{-2}	3.18	13.41
129	22	107	30	105	14	20	13	98	—	PT 1/8	4.82×10^{-2}	3.52	13.41
116	25	91	—	128	14	20	13	—	—	PT 1/8	4.82×10^{-2}	6.98	12.5
164	25	139	—	128	14	20	13	—	—	PT 1/8	4.82×10^{-2}	9.18	12.5
136	28	108	30	105	14	20	13	98	—	PT 1/8	4.82×10^{-2}	3.94	13.8
141	28	113	—	128	14	20	13	—	—	PT 1/8	4.82×10^{-2}	8.32	13.08
156	20	122	—	112	14	—	—	104	10	M6	4.82×10^{-2}	6.18	14.08
106	20	72	—	112	14	—	—	104	10	M6	4.82×10^{-2}	4.45	14.08

For model number coding, see B15-164.

No Preload Type of Precision Ball Screw

Screw shaft outer diameter	50 to 55
Lead	10 to 100

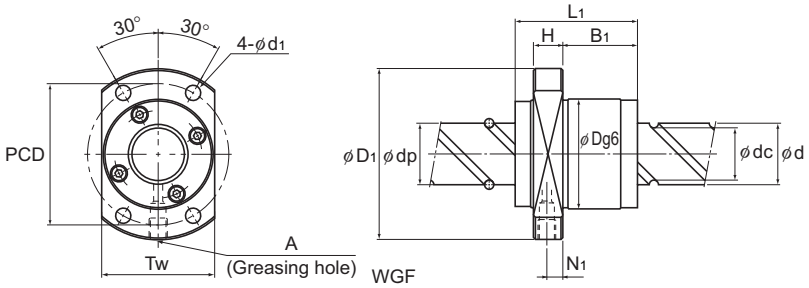

Screw shaft outer diameter d	Lead Ph	Model No.	Ball center-to-center diameter dp	Thread minor diameter dc	No. of loaded circuits Rows x turns	Basic load rating Ca kN	Basic load rating C_0a kN	Rigidity K N/μm	Outer diameter D	Flange diameter D_1
50	100	WGF 50100-1	52.2	44.1	2×0.65	22.4	50.1	270	90	135
		WGF 50100-3	52.2	44.1	2×1.65	49.9	127.2	650	90	135
55	10	BNF 5510-2.5	56.75	49.5	1×2.5	33.4	97	490	102	144
		BNF 5510-5	56.75	49.5	2×2.5	60.7	194	950	102	144
		BNF 5510-7.5	56.75	49.5	3×2.5	85.9	291.1	1390	102	144
	12	BNF 5512-2.5	57	49.2	1×2.5	39.3	108.8	500	105	147
		BNF 5512-3	57	49.2	2×1.5	46	131.3	590	105	147
		BNF 5512-3.5	57	49.2	1×3.5	52.4	152.9	680	105	147
		BNF 5512-5	57	49.2	2×2.5	71.3	218.5	960	105	147
		BNF 5512-7.5	57	49.2	3×2.5	100.9	327.3	1420	105	147
	16	BNF 5516-2.5	57.7	47.9	1×2.5	76.1	201.9	650	110	158
		BNF 5516-5	57.7	47.9	2×2.5	138.2	402.8	1280	110	158
	20	BNF 5520-2.5	57.7	47.9	1×2.5	76	201.9	660	112	158
		BNF 5520-5	57.7	47.9	2×2.5	138.2	403.8	1280	112	158

Note) The model numbers in dimmed type indicate semi-standard types. If desiring them, contact THK.
Model WGF cannot be attached with seal.

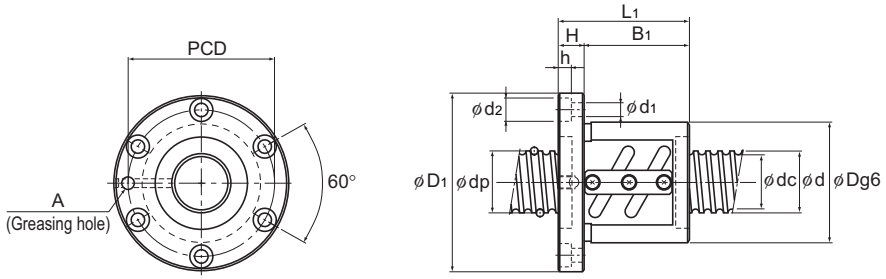

BNF

Unit: mm

Nut dimensions											Screw shaft inertial moment/mm	Nut mass	Shaft mass
	Overall length L_1	H	B_1	PCD	d_1	d_2	h	Tw	N_1	Greasing hole A	kg・cm²/mm	kg	kg/m
	98	20	64	112	14	—	—	92	10	M6	4.82×10^{-2}	4.18	14.66
	198	20	164	112	14	—	—	92	10	M6	4.82×10^{-2}	7.63	14.66
	81	18	63	122	11	17.5	11	—	—	PT 1/8	7.05×10^{-2}	4.19	16.43
	111	18	93	122	11	17.5	11	—	—	PT 1/8	7.05×10^{-2}	5.36	16.43
	141	18	123	122	11	17.5	11	—	—	PT 1/8	7.05×10^{-2}	6.54	16.43
	93	18	75	125	11	17.5	11	—	—	PT 1/8	7.05×10^{-2}	5.01	16.29
	107	18	89	125	11	17.5	11	—	—	PT 1/8	7.05×10^{-2}	5.6	16.29
	105	18	87	125	11	17.5	11	—	—	PT 1/8	7.05×10^{-2}	5.52	16.29
	129	18	111	125	11	17.5	11	—	—	PT 1/8	7.05×10^{-2}	6.54	16.29
	165	18	147	125	11	17.5	11	—	—	PT 1/8	7.05×10^{-2}	8.07	16.29
	116	25	91	133	14	20	13	—	—	PT 1/8	7.05×10^{-2}	7.4	15.46
	164	25	139	133	14	20	13	—	—	PT 1/8	7.05×10^{-2}	9.73	15.46
	127	28	99	134	14	20	13	—	—	PT 1/8	7.05×10^{-2}	8.4	16.1
	187	28	159	134	14	20	13	—	—	PT 1/8	7.05×10^{-2}	11.45	16.1

For model number coding, see B15-164.

No Preload Type of Precision Ball Screw

Screw shaft outer diameter	63
Lead	10 to 20

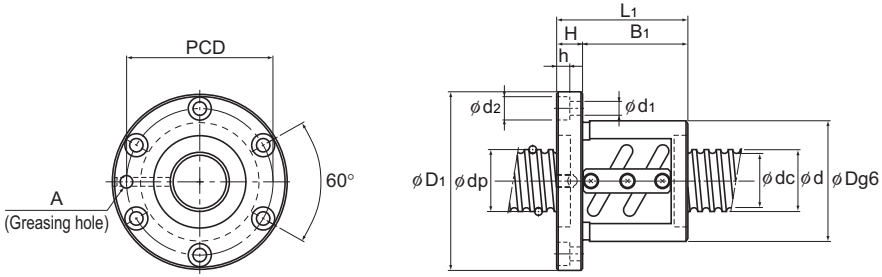

BNF

Screw shaft outer diameter d	Lead Ph	Model No.	Ball center-to-center diameter dp	Thread minor diameter dc	No. of loaded circuits Rows x turns	Basic load rating Ca kN	Basic load rating C₀a kN	Rigidity K N/μm	Outer diameter D	Flange diameter D₁
63	10	BNF 6310-2.5	64.75	57.7	1×2.5	35.4	111.7	550	108	154
		BNF 6310-5	64.75	57.7	2×2.5	64.2	222.5	1050	108	154
		BNF 6310-7.5	64.75	57.7	3×2.5	90.9	334.2	1550	108	154
		DK 6310-4	64.75	57.7	4×1	49.5	160.7	780	85	146
		DK 6310-6	64.75	57.7	6×1	70.3	242.1	1140	85	146
	12	BNF 6312A-2.5	65.25	56.3	1×2.5	48.1	139.2	560	115	161
		BNF 6312A-5	65.25	56.3	2×2.5	87.4	278.3	1090	115	161
		DK 6312-3	65.25	56.3	3×1	51.9	147.4	600	90	146
		DK 6312-4	65.25	56.3	4×1	66.4	196.6	785	90	146
	16	BNF 6316-5	65.7	55.9	2×2.5	147	462.6	1420	122	184
	20	BNF 6320-2.5	65.7	55.9	1×2.5	81	231.3	740	122	180
		BNF 6320-5	65.7	55.9	2×2.5	147	463.5	1420	122	180
		DK 6320-3	65.7	55.9	3×1	83.5	229.3	1470	95	159

Note) The model numbers in dimmed type indicate semi-standard types.
If desiring them, contact THK.

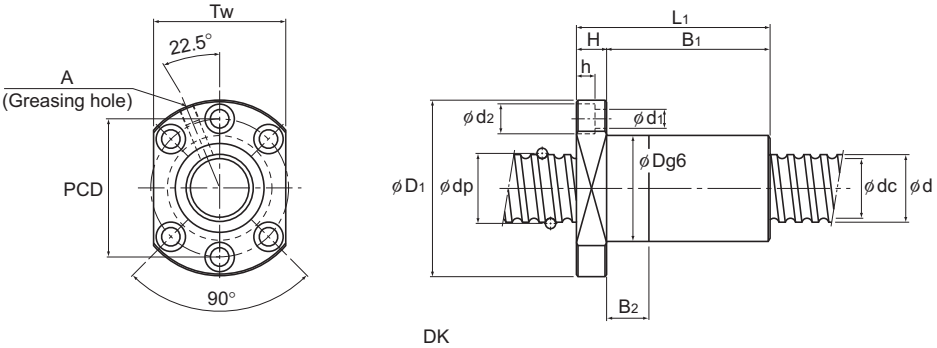

Unit: mm

Nut dimensions											Screw shaft inertial moment/mm	Nut mass	Shaft mass
	Overall length									Greasing hole			
	L_1	H	B_1	B_2	PCD	d_1	d_2	h	Tw	A	kg・cm²/mm	kg	kg/m
	77	22	55	—	130	14	20	13	—	PT 1/8	1.21×10^{-1}	4.57	21.93
	107	22	85	—	130	14	20	13	—	PT 1/8	1.21×10^{-1}	5.77	21.93
	137	22	115	—	130	14	20	13	—	PT 1/8	1.21×10^{-1}	6.98	21.93
	97	22	75	20	122	14	20	13	110	PT 1/8	1.21×10^{-1}	3.28	21.93
	118	22	96	30	122	14	20	13	110	PT 1/8	1.21×10^{-1}	3.7	21.93
	87	22	65	—	137	14	20	13	—	PT 1/8	1.21×10^{-1}	5.8	21.14
	123	22	101	—	137	14	20	13	—	PT 1/8	1.21×10^{-1}	7.56	21.14
	98	22	76	20	122	14	20	13	110	PT 1/8	1.21×10^{-1}	3.71	21.14
	111	22	89	25	122	14	20	13	110	PT 1/8	1.21×10^{-1}	4.04	21.14
	160	24	136	—	152	18	26	17.5	—	PT 1/8	1.21×10^{-1}	11.82	20.85
	127	28	99	—	150	18	26	17.5	—	PT 1/8	1.21×10^{-1}	10.1	21.57
	187	28	159	—	150	18	26	17.5	—	PT 1/8	1.21×10^{-1}	13.58	21.57
	136	28	108	30	129	18	26	17.5	121	PT 1/8	1.21×10^{-1}	6.17	21.57

For model number coding, see B15-164.

No Preload Type of Precision Ball Screw

Screw shaft outer diameter	70 to 100
Lead	10 to 20

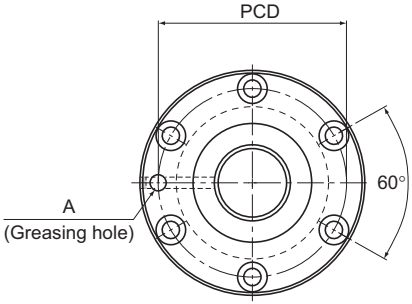

BNF

Screw shaft outer diameter d	Lead Ph	Model No.	Ball center-to-center diameter dp	Thread minor diameter dc	No. of loaded circuits Rows x turns	Basic load rating Ca kN	Basic load rating C_0a kN	Rigidity K N/μm	Outer diameter D	Flange diameter D_1
70	10	BNF 7010-2.5	71.75	64.5	1×2.5	36.8	123.5	590	125	167
		BNF 7010-5	71.75	64.5	2×2.5	66.9	247	1140	125	167
		BNF 7010-7.5	71.75	64.5	3×2.5	94.9	371.4	1680	125	167
	12	BNF 7012-2.5	72	64.2	1×2.5	43.5	139.2	600	128	170
		BNF 7012-5	72	64.2	2×2.5	78.9	278.3	1160	128	170
		BNF 7012-7.5	72	64.2	3×2.5	111.7	417.5	1710	128	170
	20	BNF 7020-5	72.7	62.9	2×2.5	153.9	514.5	1550	130	186
80	10	BNF 8010-2.5	81.75	75.2	1×2.5	38.9	141.1	650	130	176
		BNF 8010-5	81.75	75.2	2×2.5	70.6	283.2	1270	130	176
		BNF 8010-7.5	81.75	75.2	3×2.5	100	424.3	1860	130	176
	20	BNF 8020A-2.5	82.7	72.9	1×2.5	90.1	294	890	143	204
		BNF 8020A-5	82.7	72.9	2×2.5	163.7	589	1720	143	204
		BNF 8020A-7.5	82.7	72.9	3×2.5	231.6	883.2	2520	143	204
100	20	BNF 10020A-2.5	102.7	92.9	1×2.5	99	368.5	2110	170	243
		BNF 10020A-5	102.7	92.9	2×2.5	179.3	737	4080	170	243
		BNF 10020A-7.5	102.7	92.9	3×2.5	253.8	1105.4	6010	170	243

Note) The model numbers in dimmed type indicate semi-standard types.
If desiring them, contact THK.

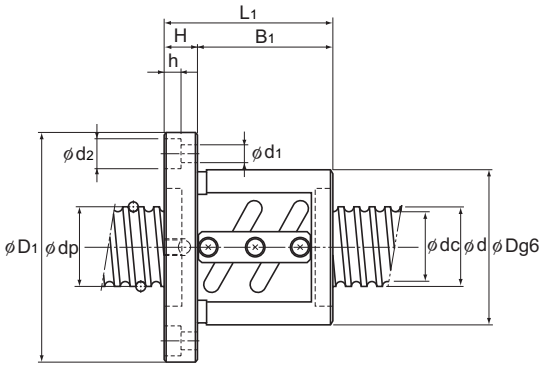

BNF

Unit: mm

Nut dimensions									Screw shaft inertial moment/mm	Nut mass	Shaft mass
	Overall length							Greasing hole			
	L_1	H	B_1	PCD	d_1	d_2	h	A	kg・cm²/mm	kg	kg/m
	81	18	63	145	11	17.5	11	PT 1/8	1.85×10^{-1}	5.8	27.4
	111	18	93	145	11	17.5	11	PT 1/8	1.85×10^{-1}	7.49	27.4
	141	18	123	145	11	17.5	11	PT 1/8	1.85×10^{-1}	9.19	27.4
	93	18	75	148	11	17.5	11	PT 1/8	1.85×10^{-1}	6.89	27.24
	129	18	111	148	11	17.5	11	PT 1/8	1.85×10^{-1}	9.08	27.24
	165	18	147	148	11	17.5	11	PT 1/8	1.85×10^{-1}	11.26	27.24
	185	28	157	158	18	26	17.5	PT 1/8	1.85×10^{-1}	14.5	27.0
	77	22	55	152	14	20	13	PT 1/8	3.16×10^{-1}	5.9	36.26
	107	22	85	152	14	20	13	PT 1/8	3.16×10^{-1}	7.53	36.26
	137	22	115	152	14	20	13	PT 1/8	3.16×10^{-1}	9.15	36.26
	127	28	99	172	18	26	17.5	PT 1/8	3.16×10^{-1}	12.68	35.81
	187	28	159	172	18	26	17.5	PT 1/8	3.16×10^{-1}	17.12	35.81
	247	28	219	172	18	26	17.5	PT 1/8	3.16×10^{-1}	21.56	35.81
	131	32	99	205	22	32	21.5	PT 1/8	7.71×10^{-1}	18.28	57.13
	191	32	159	205	22	32	21.5	PT 1/8	7.71×10^{-1}	24.2	57.13
	251	32	219	205	22	32	21.5	PT 1/8	7.71×10^{-1}	30.12	57.13

For model number coding, see B15-164.

No Preload Type of Precision Ball Screw (Square Nut)

Screw shaft outer diameter	14 to 45
Lead	4 to 12

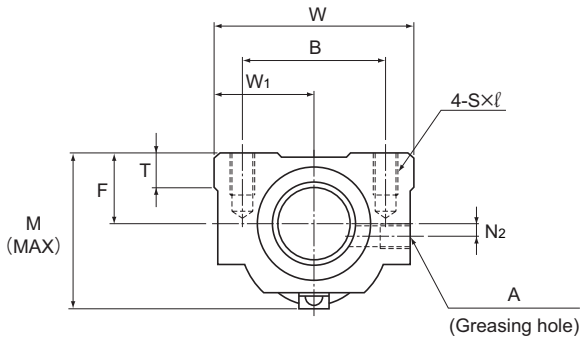

BNT

Screw shaft outer diameter d	Lead Ph	Model No.	Ball center-to-center diameter dp	Thread minor diameter dc	No. of loaded circuits Rows x turns	Basic load rating Ca kN	Basic load rating C₀a kN	Rigidity K N/μm
14	4	BNT 1404-3.6	14.4	11.5	1×3.65	6.8	12.6	190
	5	BNT 1405-2.6	14.5	11.2	1×2.65	7.2	12.6	150
16	5	BNT 1605-2.6	16.75	13.5	1×2.65	7.8	14.7	170
18	8	BNT 1808-3.6	19.3	14.4	1×3.65	18.2	34.4	270
20	5	BNT 2005-2.6	20.5	17.2	1×2.65	8.7	18.3	200
	10	BNT 2010-2.6	21.25	16.4	1×2.65	14.7	27.8	220
25	5	BNT 2505-2.6	25.5	22.2	1×2.65	9.6	23	240
	10	BNT 2510-5.3	26.8	20.2	2×2.65	43.4	92.8	520
28	6	BNT 2806-2.6	28.5	25.2	1×2.65	10.1	25.8	270
		BNT 2806-5.3	28.5	25.2	2×2.65	18.3	51.6	510
32	10	BNT 3210-2.6	33.75	27.2	1×2.65	27.3	59.5	330
		BNT 3210-5.3	33.75	27.2	2×2.65	49.6	118.9	640
36	10	BNT 3610-2.6	37	30.5	1×2.65	28.7	65.6	360
		BNT 3610-5.3	37	30.5	2×2.65	52.1	131.2	700
45	12	BNT 4512-5.3	46.5	39.2	2×2.65	68.1	186.7	860

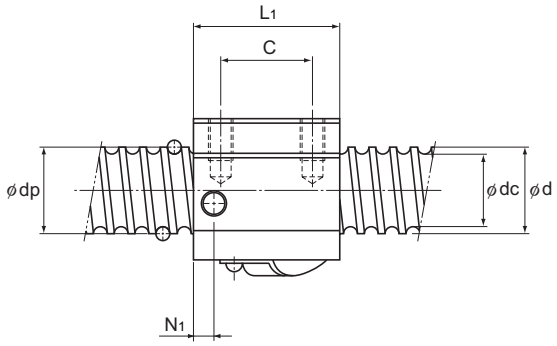

BNT

Unit: mm

	Nut dimensions												Screw shaft inertial moment/mm	Nut mass	Shaft mass
	Width	Center height	Overall length	Mounting hole								Greasing hole			
	W	F	L_1	B	C	S×ℓ	W_1	T	M	N_1	N_2	A	kg・cm²/mm	kg	kg/m
	34	13	35	26	22	M4×7	17	6	30	6	2	M6	2.96×10^{-4}	0.15	0.93
	34	13	35	26	22	M4×7	17	6	31	6	2	M6	2.96×10^{-4}	0.15	0.92
	42	16	36	32	22	M5×8	21	21.5	32.5	6	2	M6	5.05×10^{-4}	0.3	1.24
	48	17	56	35	35	M6×10	24	10	44	8	3	M6	8.09×10^{-4}	0.47	1.46
	48	17	35	35	22	M6×10	24	9	39	5	3	M6	1.23×10^{-3}	0.28	2.06
	48	18	58	35	35	M6×10	24	9	46	10	2	M6	1.23×10^{-3}	0.5	1.99
	60	20	35	40	22	M8×12	30	9.5	45	7	5	M6	3.01×10^{-3}	0.41	3.35
	60	23	94	40	60	M8×12	30	10	55	10	—	M6	3.01×10^{-3}	1.18	2.79
	60	22	42	40	18	M8×12	30	10	50	8	—	M6	4.74×10^{-3}	0.81	4.42
	60	22	67	40	40	M8×12	30	10	50	8	—	M6	4.74×10^{-3}	0.78	4.42
	70	26	64	50	45	M8×12	35	12	62	10	—	M6	8.08×10^{-3}	1.3	4.98
	70	26	94	50	60	M8×12	35	12	62	10	—	M6	8.08×10^{-3}	2.0	4.98
	86	29	64	60	45	M10×16	43	17	67	11	—	M6	1.29×10^{-2}	1.8	6.54
	86	29	96	60	60	M10×16	43	17	67	11	—	M6	1.29×10^{-2}	2.4	6.54
	100	36	115	75	75	M12×20	50	20.5	80	13	—	M6	3.16×10^{-2}	4.1	10.56

For model number coding, see B15-164.

Model Number Coding

Model number coding

BNFN 20 05 L -5 RR G0 + 620L C5 A

- BNFN: Model number
- 20: Screw shaft outer diameter (in mm)
- 05: Lead (in mm)
- L: Threading direction (No symbol: right-hand thread L: left-hand thread RL: Right and left hand thread)
- -5: No. of circuits (Rows × turns)
- RR: Seal symbol (Labyrinth seal attached to both ends)
- G0: Symbol for clearance in the axial direction
- 620L: Overall screw shaft length (in mm)
- C5: Accuracy symbol
- A: Standard Ball Screw assembly (A,B: Unfinished Shaft Ends Y: Finished Shaft Ends)

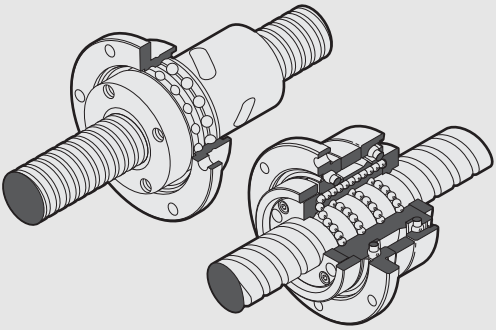

Precision Rotary Ball Screw
Model DIR and BLR

Ball Screw

B Product Specifications

Dimensional Drawing, Dimensional Table

Model DIR Standard-Lead
Rotary-Nut Ball Screw B15-166
Model BLR Large Lead
Rotary-Nut Precision Ball Screw ... B15-168

Permissible Rotational Speeds for
Rotary Ball Screws B15-170

A Technical Descriptions of the Products (Separate)

Technical Descriptions

Structure and Features A15-121
Type A15-123
Service Life A15-44
Axial Clearance A15-25
Accuracy Standards A15-124
Example of Assembly..... A15-126

* Please see the separate "A Technical Descriptions of the Products".

Model DIR Standard-Lead Rotary-Nut Ball Screw

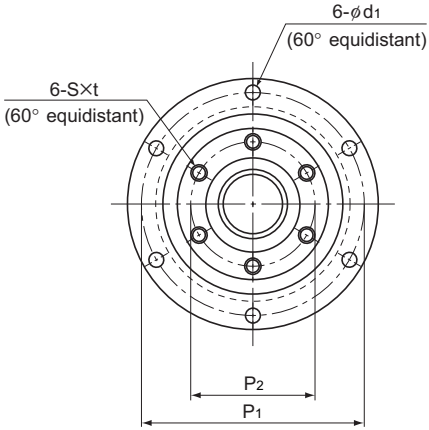

Model No.	Screw shaft outer diameter d	Thread minor diameter dc	Lead Ph	Ball center-to-center diameter dp	Basic load rating Ca kN	Basic load rating C0a kN	Rigidity K N/μm	Outer diameter D	Flange diameter D1	Overall length L1	D3 h7
DIR 1605-6	16	13.2	5	16.75	7.4	13	310	48	64	79	36
DIR 2005-6	20	17.2	5	20.75	8.5	17.3	310	56	72	80	43.5
DIR 2505-6	25	22.2	5	25.75	9.7	22.6	490	66	86	88	52
DIR 2510-4		21.6	10	26	9	18	330	66	86	106	52
DIR 3205-6	32	29.2	5	32.75	11.1	30.2	620	78	103	86	63
DIR 3206-6		28.4	6	33	14.9	37.1	630	78	103	97	63
DIR 3210-6		26.4	10	33.75	25.7	52.2	600	78	103	131	63
DIR 3610-6	36	30.5	10	37.75	28.8	63.8	710	92	122	151	72
DIR 4010-6	40	34.7	10	41.75	29.8	69.3	750	100	130	142	79.5
DIR 4012-6		34.4	12	41.75	30.6	72.3	790	100	130	167	79.5

Model number coding

DIR2005-6 RR G0 +520L C1

- DIR2005-6: Model number
- RR: Seal symbol (*1)
- G0: Symbol for clearance in the axial direction (*2)
- +520L: Overall screw shaft length (in mm)
- C1: Accuracy symbol (*3)

(*1) See A15-166. (*2) See A15-25. (*3) See A15-18.

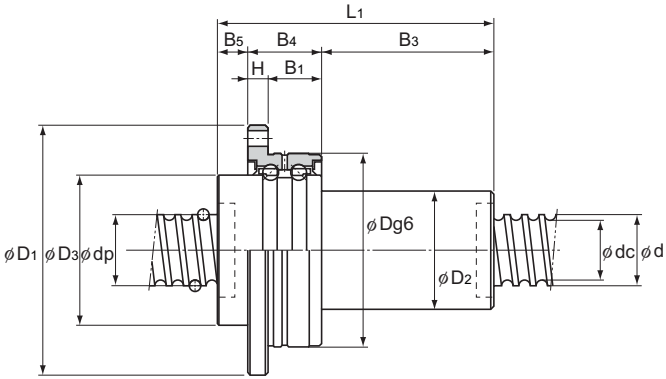

Unit: mm

Ball screw dimensions											Support bearing basic load rating		Nut inertial moment	Nut mass	Shaft mass
											Ca	C_0a			
D_2	B_5	B_4	B_3	P_1	P_2	H	B_1	S	t	d_1	kN	kN	kg・cm²	kg	kg/m
30	8	21	50	56	30	6	15	M4	6	4.5	8.7	10.5	0.61	0.49	1.24
34	9	21	50	64	36	6	15	M5	8	4.5	9.7	13.4	1.18	0.68	2.05
40	13	25	50	75	43	7	18	M6	10	5.5	12.7	18.2	2.65	1.07	3.34
40	11	25	70	75	43	7	18	M6	10	5.5	12.7	18.2	2.84	1.16	3.52
46	11	25	50	89	53	8	17	M6	10	6.6	13.6	22.3	5.1	1.39	5.67
48	11	25	61	89	53	8	17	M6	10	6.6	13.6	22.3	5.68	1.54	5.47
54	11	25	95	89	53	8	17	M6	10	6.6	13.6	22.3	8.13	2.16	4.98
58	14	33	104	105	61	10	23	M8	12	9	20.4	32.3	14.7	3.25	6.51
62	14	33	95	113	67	10	23	M8	12	9	21.5	36.8	20.6	3.55	8.22
62	14	33	120	113	67	10	23	M8	12	9	21.5	36.8	22.5	3.9	8.5

Note) The rigidity values in the table represent spring constants each obtained from the load and the elastic deformation when providing a preload 10% of the basic dynamic load rating (Ca) and applying an axial load three times greater than the preload.
These values do not include the rigidity of the components related to mounting the ball screw nut. Therefore, it is normally appropriate to regard roughly 80% of the value in the table as the actual value.
If the applied preload (Fa_0) is not 0.1 Ca, the rigidity value (K_N) is obtained from the following equation.

$$K_N = K\left(\frac{Fa_0}{0.1Ca}\right)^{\frac{1}{3}}$$

K: Rigidity value in the dimensional table.

Model BLR Large Lead Rotary-Nut Precision Ball Screw

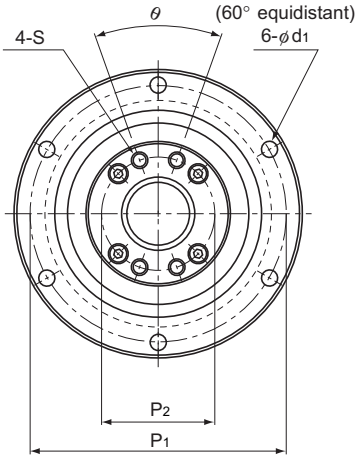

Model No.	Screw shaft outer diameter d	Thread minor diameter dc	Lead Ph	Ball center-to-center diameter dp	Basic load rating Ca kN	Basic load rating C_0a kN	Outer diameter D	Flange diameter D_1	Overall length L_1	D_3
BLR 1616-3.6	16	13.7	16	16.65	7.1	14.3	$52^{0}_{-0.007}$	68	43.5	$40^{0}_{-0.025}$
BLR 2020-3.6	20	17.5	20	20.75	11.1	24.7	$62^{0}_{-0.007}$	78	54	$50^{0}_{-0.025}$
BLR 2525-3.6	25	21.9	25	26	16.6	38.7	$72^{0}_{-0.007}$	92	65	$58^{0}_{-0.03}$
BLR 3232-3.6	32	28.3	32	33.25	23.7	59.5	$80^{0}_{-0.007}$	105	80	$66^{0}_{-0.03}$
BLR 3636-3.6	36	31.7	36	37.4	30.8	78	$100^{0}_{-0.008}$	130	93	$80^{0}_{-0.03}$
BLR 4040-3.6	40	35.2	40	41.75	38.7	99.2	$110^{0}_{-0.008}$	140	98	$90^{0}_{-0.035}$
BLR 5050-3.6	50	44.1	50	52.2	57.8	155	$120^{0}_{-0.008}$	156	126	$100^{0}_{-0.035}$

Model number coding

BLR2020-3.6 K UU G1 +1000L C5

- BLR2020-3.6: Model number
- K: Flange orientation symbol (*1)
- UU: Symbol for support bearing seal (*2)
- G1: Symbol for clearance in the axial direction (*3)
- +1000L: Overall screw shaft length (in mm)
- C5: Accuracy symbol (*4)

(*1) See A15-126 (*2) UU: Seal attached on both ends No symbol: Without seal (*3) See A15-25 (*4) See A15-18

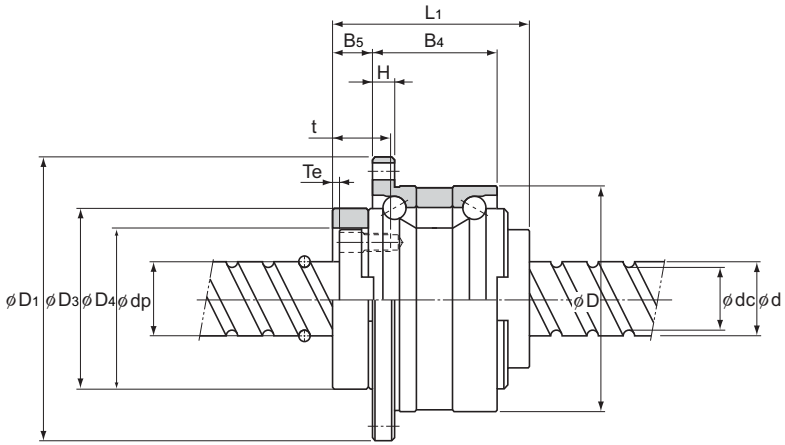

Unit: mm

Ball screw dimensions												Support bearing basic load rating		Nut inertial moment	Nut mass	Shaft mass
	D_4	H	B_4	B_5	Te	P_1	P_2	S	t	d_1	θ°	Ca kN	C_0a kN	kg・cm²	kg	kg/m
	$32^{+0.025}_{0}$	5	27.5	9	2	60	25	M4	12	4.5	40	19.4	19.2	0.48	0.38	1.41
	$39^{+0.025}_{0}$	6	34	11	2	70	31	M5	16	4.5	40	26.8	29.3	1.44	0.68	2.25
	$47^{+0.025}_{0}$	8	43	12.5	3	81	38	M6	19	5.5	40	28.2	33.3	3.23	1.1	3.52
	$58^{+0.03}_{0}$	9	55	14	3	91	48	M6	19	6.6	40	30	39	6.74	1.74	5.83
	$66^{+0.03}_{0}$	11	62	17	3	113	54	M8	22	9	40	56.4	65.2	16.8	3.2	7.34
	$73^{+0.03}$	11	68	16.5	3	123	61	M8	22	9	50	59.3	74.1	27.9	3.95	9.01
	$90^{+0.035}_{0}$	12	80	25	4	136	75	M10	28	11	50	62.2	83	58.2	6.22	14.08

Permissible Rotational Speeds for Rotary Ball Screws

The permissible rotational speeds for models DIR and BLR and rotary ball screws is restricted to whichever is lower of the support bearing permissible rotational speed, the DN value (70,000) and the critical speed of the screw. When using the product, do not exceed the permissible rotational speed.

Table1 Model DIR permissible rotational speed

Unit:min^{-1}

Model No.	Permissible Rotational Speed			
	Ball Screw Unit		Support bearing	
	Calculated using shaft length	Calculated using DN value	Grease Lubrication	Oil Lubrication
DIR1605	see A15-36.	4179	4200	5600
DIR2005		3373	3500	4700
DIR2505		2718	2900	3900
DIR2510		2692	2900	3900
DIR3205		2137	2400	3300
DIR3206		2121	2400	3300
DIR3210		2074	2400	3300
DIR3610		1854	2100	2800
DIR4010		1676	1900	2600
DIR4012		1676	1900	2600

Table2 Model BLR permissible rotational speed

Unit:min^{-1}

Model No.	Permissible Rotational Speed			
	Ball Screw Unit		Support bearing	
	Calculated using shaft length	Calculated using DN value	Grease Lubrication	Oil Lubrication
BLR1616	see A15-36.	4204	4000	5600
BLR2020		3373	3200	4300
BLR2525		2692	2800	3700
BLR3232		2105	2400	3300
BLR3636		1871	2000	2700
BLR4040		1676	1800	2400
BLR5050		1340	1600	2200

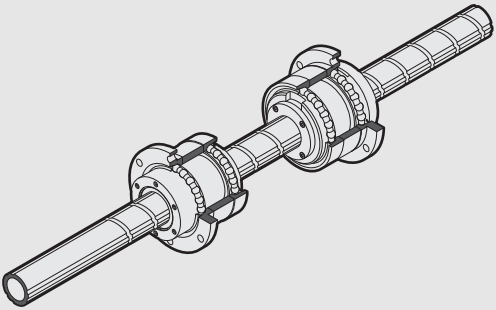

Precision Ball Screw/Spline
Models BNS-A, BNS, NS-A and NS

Ball Screw

B Product Specifications

Dimensional Drawing, Dimensional Table

Model BNS-A Compact Type:
Straight-curved Motion B15-172
Model BNS Heavy-load Type:
Straight-curved Motion B15-174
Model NS-A Compact Type:
Straight Motion B15-176
Model NS Heavy-load Type:
Linear Motion B15-178

A Technical Descriptions of the Products (Separate)

Technical Descriptions

Structure and Features A15-129
Type A15-130
Service Life A15-44
Axial Clearance A15-25
Accuracy Standards A15-131
Action Patterns A15-132
Example of Assembly A15-135
Example of Using A15-136
Precautions on Use A15-137

* Please see the separate "A Technical Descriptions of the Products".

Model BNS-A Compact Type: Straight-curved Motion

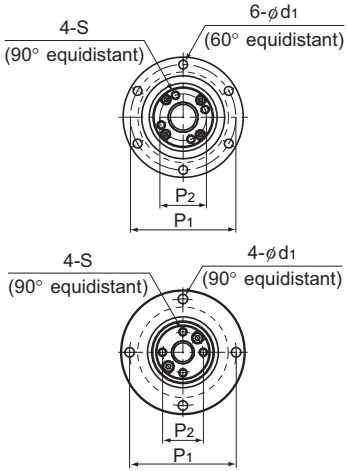

Models BNS 0812A and 1015A

Ball screw unit

Model No.	Screw shaft outer diameter	Screw shaft inner diameter	Lead	Ball screw dimensions								
				Basic load rating		Ball center-to-center diameter	Thread minor diameter	Outer diameter	Flange diameter	Overall length	D_3	D_4
				Ca	C_0a			D				
	d	db	Ph	kN	kN	dp	dc	g6	D_1	L_1	h7	H7
BNS 0812A	8	—	12	1.1	1.8	8.4	6.6	32	44	28.5	22	19
BNS 1015A	10	—	15	1.7	2.7	10.5	8.3	36	48	34.5	26	23
BNS 1616A	16	11	16	3.9	7.2	16.65	13.7	48	64	40	36	32
BNS 2020A	20	14	20	6.1	12.3	20.75	17.5	56	72	48	43.5	39
BNS 2525A	25	18	25	9.1	19.3	26	21.9	66	86	58	52	47
BNS 3232A	32	23	32	13	29.8	33.25	28.3	78	103	72	63	58
BNS 4040A	40	29	40	21.4	49.7	41.75	35.2	100	130	88	79.5	73

Ball spline

Model No.	Ball spline dimensions									
	Basic load rating		Static permissible moment	Basic torque rating		Outer diameter	Flange diameter	Overall length	D_6	
	C	C_0	M_A	C_T	C_{0T}	D_7				
	kN	kN	N-m	N-m	N-m	g6	D_5	L_2	h7	BE_1
BNS 0812A	1.5	2.6	5.9	2	2.9	32	44	25	24	16
BNS 1015A	2.7	4.9	15.7	3.9	7.8	36	48	33	28	21
BNS 1616A	7.1	12.6	67.6	31.4	34.3	48	64	50	36	31
BNS 2020A	10.2	17.8	118	56.8	55.8	56	72	63	43.5	35
BNS 2525A	15.2	25.8	210	105	103	66	86	71	52	42
BNS 3232A	20.5	34	290	180	157	78	103	80	63	52
BNS 4040A	37.8	60.5	687	418	377	100	130	100	79.5	64

Note) For K hollow shaft, please refer to the db dimension for the inner bore diameter of the shaft. If requested solid shaft is also available. See "Ball Spline" B3-46 for details.

Model number coding

BNS2020A +500L

Model number — Overall shaft length (in mm)

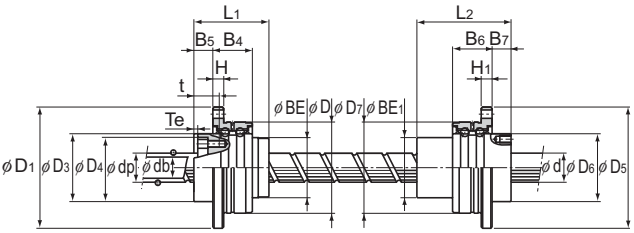

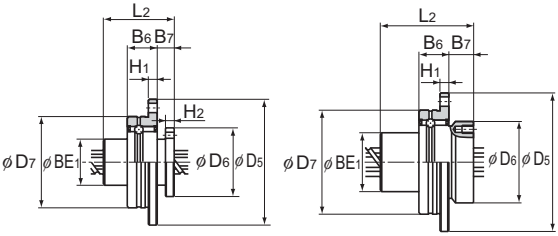

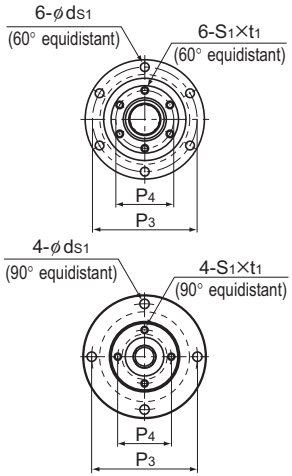

Model BNS 0812A　　Model BNS 1015A　　Models BNS 0812A and 1015A

Unit: mm

BE	H	B_4	B_5	Te	P_1	P_2	S	t	d_1	Support bearing basic load rating Ca kN	Support bearing basic load rating C_0a kN	Nut inertial moment kg・cm²	Screw shaft inertial moment/mm J kg・cm²/mm	Nut mass kg	Shaft mass kg/m
19	3	10.5	7	1.5	38	14.5	M2.6	10	3.4	0.8	0.5	0.03	3.16×10^{-5}	0.08	0.35
23	3	10.5	8	1.5	42	18	M3	11.5	3.4	0.9	0.7	0.08	7.71×10^{-5}	0.15	0.52
32	6	21	10	2	56	25	M4	13.5	4.5	8.7	10.5	0.35	3.92×10^{-4}	0.31	0.8
39	6	21	11	2.5	64	31	M5	16.5	4.5	9.7	13.4	0.85	9.37×10^{-4}	0.54	1.21
47	7	25	13	3	75	38	M6	20	5.5	12.7	18.2	2.12	2.2×10^{-3}	0.88	1.79
58	8	25	14	3	89	48	M6	21	6.6	13.6	22.3	5.42	5.92×10^{-3}	1.39	2.96
73	10	33	16.5	3	113	61	M8	24.5	9	21.5	36.8	17.2	1.43×10^{-2}	3.16	4.51

Unit: mm

H_1	B_6	B_7	H_2	P_3	P_4	$S_1\times t_1$	d_{s1}	Support bearing basic load rating C kN	Support bearing basic load rating C_0 kN	Nut inertial moment kg・cm²	Nut mass kg
3	10.5	6	3	38	19	M2.6×3	3.4	0.6	0.2	0.03	0.08
3	10.5	9	—	42	23	M3×4	3.4	0.8	0.3	0.08	0.13
6	21	10	—	56	30	M4×6	4.5	6.7	6.4	0.44	0.35
6	21	12	—	64	36	M5×8	4.5	7.4	7.8	0.99	0.51
7	25	13	—	75	44	M5×8	5.5	9.7	10.6	2.2	0.79
8	25	17	—	89	54	M6×10	6.6	10.5	12.5	5.17	1.25
10	33	20	—	113	68	M6×10	9	16.5	20.7	16.1	2.51

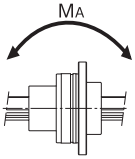

Model BNS Heavy-load Type: Straight-curved Motion

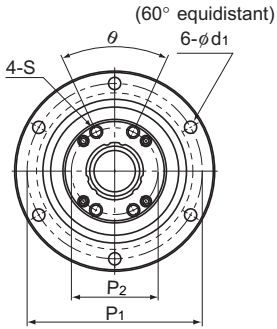

Ball screw unit

Model No.	Screw shaft outer diameter	Screw shaft inner diameter	Lead	Ball screw dimensions							
				Basic load rating		Ball center-to-center diameter	Thread minor diameter	Outer diameter	Flange diameter	Overall length	D_3
				Ca	C_0a						
	d	db	Ph	kN	kN	dp	dc	D	D_1	L_1	h7
BNS 1616	16	11	16	3.9	7.2	16.65	13.7	52 $^{0}_{-0.007}$	68	43.5	40
BNS 2020	20	14	20	6.1	12.3	20.75	17.5	62 $^{0}_{-0.007}$	78	54	50
BNS 2525	25	18	25	9.1	19.3	26	21.9	72 $^{0}_{-0.007}$	92	65	58
BNS 3232	32	23	32	13	29.8	33.25	28.3	80 $^{0}_{-0.007}$	105	80	66
BNS 4040	40	29	40	21.4	49.7	41.75	35.2	110 $^{0}_{-0.008}$	140	98	90
BNS 5050	50	36	50	31.8	77.6	52.2	44.1	120 $^{0}_{-0.008}$	156	126	100

Ball spline

Model No.	Ball spline dimensions							
	Basic load rating		Static permissible moment	Basic torque rating		Outer diameter	Flange diameter	Overall length
	C	C_0	M_A	C_T	C_{0T}			
	kN	kN	N-m	N-m	N-m	D_7	D_5	L_2
BNS 1616	7.1	12.6	67.6	31.4	34.3	52 $^{0}_{-0.007}$	68	50
BNS 2020	10.2	17.8	118	56.8	55.8	56 $^{0}_{-0.007}$	72	63
BNS 2525	15.2	25.8	210	105	103	62 $^{0}_{-0.007}$	78	71
BNS 3232	20.5	34	290	180	157	80 $^{0}_{-0.007}$	105	80
BNS 4040	37.8	60.5	687	418	377	100 $^{0}_{-0.008}$	130	100
BNS 5050	60.9	94.5	1340	842	768	120 $^{0}_{-0.008}$	156	125

Note) Dimension U indicates the length from the head of the hexagonal-socket-head type bolt to the ball screw nut end.
For K hollow shaft, please refer to the db dimension for the inner bore diameter of the shaft. If requested solid shaft is also available. See "Ball Spline" B3-46 for details.

Model number coding

BNS2525 +600L

Model number — Overall shaft length (in mm)

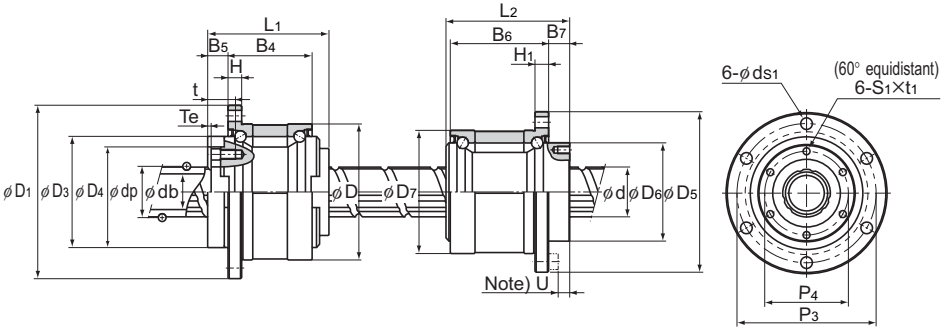

Unit: mm

											Support bearing basic load rating		Nut inertial moment	Screw shaft inertial moment/mm	Nut mass	Shaft mass
	D_4 H7	H	B_4	B_5	Te	P_1	P_2	S	t	d_1	θ°	Ca kN	C_0a kN	kg・cm²	J kg・cm²/mm	kg	kg/m
	32	5	27.5	9	2	60	25	M4	12	4.5	40	19.4	19.2	0.48	3.92×10^{-4}	0.38	0.8
	39	6	34	11	2	70	31	M5	16	4.5	40	26.8	29.3	1.44	9.37×10^{-4}	0.68	1.21
	47	8	43	12.5	3	81	38	M6	19	5.5	40	28.2	33.3	3.23	2.2×10^{-3}	1.1	1.79
	58	9	55	14	3	91	48	M6	19	6.6	40	30	39	6.74	5.92×10^{-3}	1.74	2.96
	73	11	68	16.5	3	123	61	M8	22	9	50	59.3	74.1	27.9	1.43×10^{-2}	3.95	4.51
	90	12	80	25	4	136	75	M10	28	11	50	62.2	83	58.2	3.52×10^{-2}	6.22	7.16

Unit: mm

										Support bearing basic load rating		Nut inertial moment	Nut mass
	D_6 h7	H_1	B_6	B_7	P_3	P_4	$S_1\times t_1$	d_{s1}	U	C kN	C_0 kN	kg・cm²	kg
	39.5	5	37	10	60	32	M5×8	4.5	5	12.7	11.8	0.52	0.51
	43.5	6	48	12	64	36	M5×8	4.5	7	16.2	15.5	0.87	0.7
	53	6	55	13	70	45	M6×8	4.5	8	17.6	18	1.72	0.93
	65.5	9	60	17	91	55	M6×10	6.6	10	20.1	24	5.61	1.8
	79.5	11	74	23	113	68	M6×10	9	13	37.2	42.5	14.7	3.9
	99.5	12	97	25	136	85	M10×15	11	13	41.6	54.1	62.5	6.7

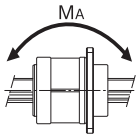

Model NS-A Compact Type: Straight Motion

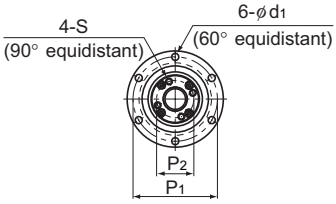

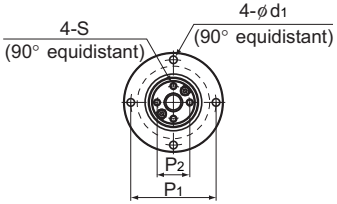

Models NS 0812A and 1015A

Ball screw unit

Model No.	Screw shaft outer diameter	Screw shaft inner diameter	Lead	Ball screw dimensions								
				Basic load rating		Ball center-to-center diameter	Thread minor diameter	Outer diameter	Flange diameter	Overall length	D_3	D_4
				Ca	C_0a			D				
	d	db	Ph	kN	kN	dp	dc	g6	D_1	L_1	h7	H7
NS 0812A	8	—	12	1.1	1.8	8.4	6.6	32	44	28.5	22	19
NS 1015A	10	—	15	1.7	2.7	10.5	8.3	36	48	34.5	26	23
NS 1616A	16	11	16	3.9	7.2	16.65	13.7	48	64	40	36	32
NS 2020A	20	14	20	6.1	12.3	20.75	17.5	56	72	48	43.5	39
NS 2525A	25	18	25	9.1	19.3	26	21.9	66	86	58	52	47
NS 3232A	32	23	32	13	29.8	33.25	28.3	78	103	72	63	58
NS 4040A	40	29	40	21.4	49.7	41.75	35.2	100	130	88	79.5	73

Ball spline

Model No.	Ball spline dimensions						
	Basic load rating		Static permissible moment	Basic torque rating		Outer diameter	Flange diameter
	C	C_0	M_A	C_T	C_{0T}	D_7	D_5 $^{0}_{-0.2}$
	kN	kN	N-m	N-m	N-m		
NS 0812A	1.5	2.6	5.9	2	2.9	16 $^{0}_{-0.011}$	32
NS 1015A	2.8	4.9	15.7	3.9	7.8	21 $^{0}_{-0.013}$	42
NS 1616A	7.1	12.6	67.6	31.4	34.3	31 $^{0}_{-0.013}$	51
NS 2020A	10.2	17.8	118	56.8	55.8	35 $^{0}_{-0.016}$	58
NS 2525A	15.2	25.8	210	105	103	42 $^{0}_{-0.016}$	65
NS 3232A	20.5	34	290	180	157	49 $^{0}_{-0.016}$	77
NS 4040A	37.8	60.5	687	418	377	64 $^{0}_{-0.019}$	100

Note) For K hollow shaft, please refer to the db dimension for the inner bore diameter of the shaft. If requested solid shaft is also available. See "Ball Spline" B3-46 for details.

Model number coding

NS2020A +500L

Model number Overall shaft length (in mm)

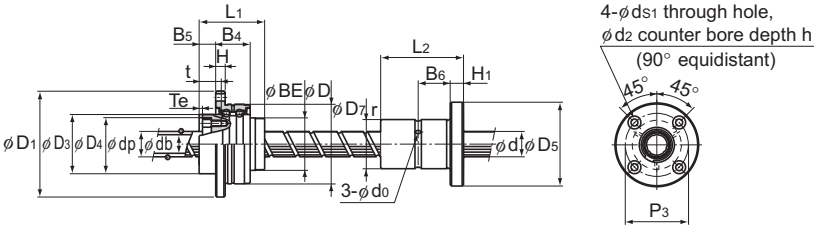

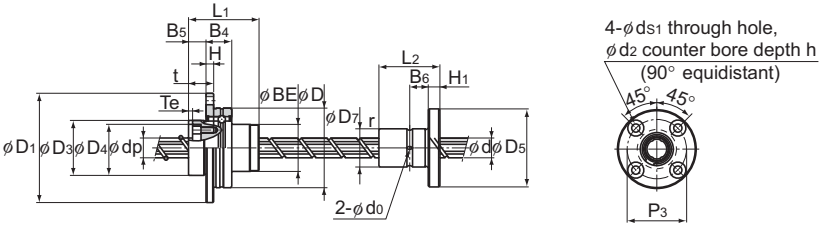

Models NS 0812A and 1015A

Unit: mm

										Support bearing basic load rating		Nut inertial moment	Screw shaft inertial moment/mm	Nut mass	Shaft mass
										Ca	C_0a				
	BE	H	B_4	B_5	Te	P_1	P_2	S	t	d_1	kN	kN	kg・cm²	J kg・cm²/mm	kg	kg/m
	19	3	10.5	7	1.5	38	14.5	M2.6	10	3.4	0.8	0.5	0.03	3.16×10^{-5}	0.08	0.35
	23	3	10.5	8	1.5	42	18	M3	11.5	3.4	0.9	0.7	0.08	7.71×10^{-5}	0.15	0.52
	32	6	21	10	2	56	25	M4	13.5	4.5	8.7	10.5	0.35	3.92×10^{-4}	0.31	0.8
	39	6	21	11	2.5	64	31	M5	16.5	4.5	9.7	13.4	0.85	9.37×10^{-4}	0.54	1.21
	47	7	25	13	3	75	38	M6	20	5.5	12.7	18.2	2.12	2.2×10^{-3}	0.88	1.79
	58	8	25	14	3	89	48	M6	21	6.6	13.6	22.3	5.42	5.92×10^{-3}	1.39	2.96
	73	10	33	16.5	3	113	61	M8	24.5	9	21.5	36.8	17.2	1.43×10^{-2}	3.16	4.51

Unit: mm

										Nut mass
							Mounting hole			
	Overall length L_2	H_1	B_6	r	Greasing hole d_0	P_3	d_{S1}	d_2	h	kg
	25	5	7.5	0.5	1.5	24	3.4	6.5	3.3	0.04
	33	6	10.5	0.5	1.5	32	4.5	8	4.4	0.09
	$50\ ^{0}_{-0.2}$	7	18	0.5	2	40	4.5	8	4.4	0.23
	$63\ ^{0}_{-0.2}$	9	22.5	0.5	2	45	5.5	9.5	5.4	0.33
	$71\ ^{0}_{-0.3}$	9	26.5	0.5	3	52	5.5	9.5	5.4	0.45
	$80\ ^{0}_{-0.3}$	10	30	0.5	3	62	6.6	11	6.5	0.58
	$100\ ^{0}_{-0.3}$	14	36	0.5	4	82	9	14	8.6	1.46

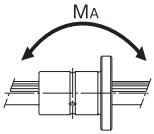

Model NS Heavy-load Type: Linear Motion

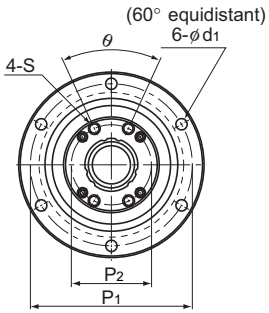

Ball screw unit

Model No.	Screw shaft outer diameter d	Screw shaft inner diameter db	Lead Ph	Ball screw dimensions: Basic load rating Ca kN	Basic load rating C_0a kN	Ball center-to-center diameter dp	Thread minor diameter dc	Outer diameter D	Flange diameter D_1	Overall length L_1	D_3 h7
NS 1616	16	11	16	3.9	7.2	16.65	13.7	52 $^{0}_{-0.007}$	68	43.5	40
NS 2020	20	14	20	6.1	12.3	20.75	17.5	62 $^{0}_{-0.007}$	78	54	50
NS 2525	25	18	25	9.1	19.3	26	21.9	72 $^{0}_{-0.007}$	92	65	58
NS 3232	32	23	32	13	29.8	33.25	28.3	80 $^{0}_{-0.007}$	105	80	66
NS 4040	40	29	40	21.4	49.7	41.75	35.2	110 $^{0}_{-0.008}$	140	98	90
NS 5050	50	36	50	31.8	77.6	52.2	44.1	120 $^{0}_{-0.008}$	156	126	100

Ball spline

Model No.	Ball spline dimensions: Basic load rating C kN	Basic load rating C_0 kN	Static permissible moment M_A N-m	Basic torque rating C_T N-m	Basic torque rating C_{0T} N-m	Outer diameter D_7
NS 1616	7.1	12.6	67.6	31.4	34.3	31 $^{0}_{-0.013}$
NS 2020	10.2	17.8	118	56.9	55.9	35 $^{0}_{-0.016}$
NS 2525	15.2	25.8	210	105	103	42 $^{0}_{-0.016}$
NS 3232	20.5	34	290	180	157	49 $^{0}_{-0.016}$
NS 4040	37.8	60.5	687	419	377	64 $^{0}_{-0.019}$
NS 5050	60.9	94.5	1340	842	769	80 $^{0}_{-0.019}$

Note) For K hollow shaft, please refer to the db dimension for the inner bore diameter of the shaft. If requested solid shaft is also available. See "Ball Spline" B3-46 for details.

Model number coding

NS2525 +600L

Model number Overall shaft length (in mm)

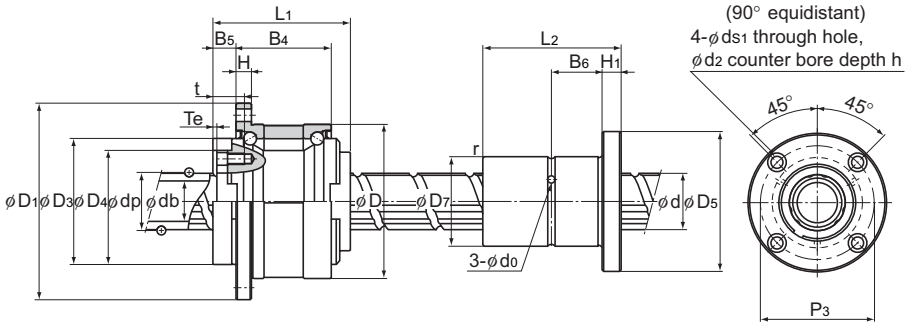

Unit: mm

	D_4 H7	H	B_4	B_5	Te	P_1	P_2	S	t	d_1	θ°	Support bearing basic load rating Ca kN	Support bearing basic load rating C_0a kN	Nut inertial moment kg・cm²	Screw shaft inertial moment/mm J kg・cm²/mm	Nut mass kg	Shaft mass kg/m
	32	5	27.5	9	2	60	25	M4	12	4.5	40	19.4	19.2	0.48	3.92×10^{-4}	0.38	0.8
	39	6	34	11	2	70	31	M5	16	4.5	40	26.8	29.3	1.44	9.37×10^{-4}	0.68	1.21
	47	8	43	12.5	3	81	38	M6	19	5.5	40	28.2	33.3	3.23	2.2×10^{-3}	1.1	1.79
	58	9	55	14	3	91	48	M6	19	6.6	40	30	39	6.74	5.92×10^{-3}	1.74	2.96
	73	11	68	16.5	3	123	61	M8	22	9	50	59.3	74.1	27.9	1.43×10^{-2}	3.95	4.51
	90	12	80	25	4	136	75	M10	28	11	50	62.2	83	58.2	3.52×10^{-2}	6.22	7.16

Unit: mm

	Flange diameter D_5	Overall length L_2	H_1	B_6	r	Greasing hole d_0	P_3	Mounting hole d_{S1}	Mounting hole d_2	Mounting hole h	Nut mass kg
	51	$50^{0}_{-0.2}$	7	18	0.5	2	40	4.5	8	4.4	0.23
	58	$63^{0}_{-0.2}$	9	22.5	0.5	2	45	5.5	9.5	5.4	0.33
	65	$71^{0}_{-0.3}$	9	26.5	0.5	3	52	5.5	9.5	5.4	0.45
	77	$80^{0}_{-0.3}$	10	30	0.5	3	62	6.6	11	6.5	0.58
	100	$100^{0}_{-0.3}$	14	36	0.5	4	82	9	14	8.6	1.46
	124	$125^{0}_{-0.3}$	16	46.5	1	4	102	11	17.5	11	2.76

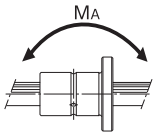

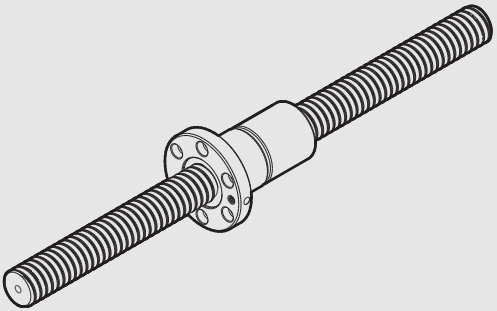

Rolled Ball Screw
Models JPF, BTK, MTF, BLK/WTF, CNF and BNT

Ball Screw

B Product Specifications

Dimensional Drawing, Dimensional Table

Preload Type of Rolled Ball Screw.... B15-182
No Preload Type of Rolled Ball Screw. B15-184
No Preload Type of Rolled Ball Screw (Square Nut) B15-190

Model Number Coding B15-192

Options

Dimensions of the Ball Screw Nut Attached with Wiper Ring W and QZ Lubricator B15-228

A Technical Descriptions of the Products (Separate)

Technical Descriptions

Structure and Features A15-139
Types and Features A15-140
Service Life A15-44
Axial Clearance A15-25
Accuracy Standards A15-18

* Please see the separate "A Technical Descriptions of the Products".

Preload Type of Rolled Ball Screw

Screw shaft outer diameter	14 to 40
Lead	4 to 10

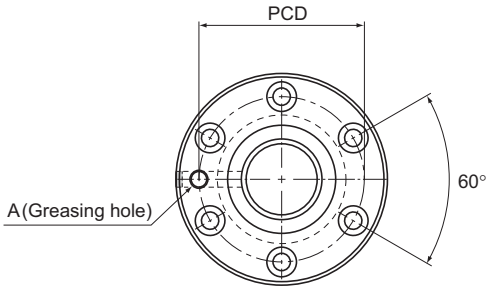

JPF

Screw shaft outer diameter d	Lead Ph	Model No.	Ball center-to-center diameter dp	Thread minor diameter dc	No. of loaded circuits Rows x turns	Basic load rating Ca kN	Basic load rating C_0a kN	Outer diameter D
14	4	JPF 1404-4	14.4	11.5	2×1	2.8	5.1	26
	5	JPF 1405-4	14.5	11.2	2×1	3.9	8.6	26
16	5	JPF 1605-4	16.75	13.5	2×1	3.7	8.2	30
20	5	JPF 2005-6	20.5	17.2	3×1	6	16	34
25	5	JPF 2505-6	25.5	22.2	3×1	6.9	20.8	40
	10	JPF 2510-4	26.8	20.2	2×1	11.4	24.5	47
28	5	JPF 2805-6	28.75	25.2	3×1	7.3	23.9	43
	6	JPF 2806-6	28.5	25.2	3×1	7.3	23.9	43
32	10	JPF 3210-6	33.75	27.2	3×1	19.3	49.9	54
36	10	JPF 3610-6	37	30.5	3×1	20.6	56.2	58
40	10	JPF 4010-6	41.75	35.2	3×1	22.2	65.3	62

Note) The ball screw nut and the screw shaft of model JPF are not sold alone.

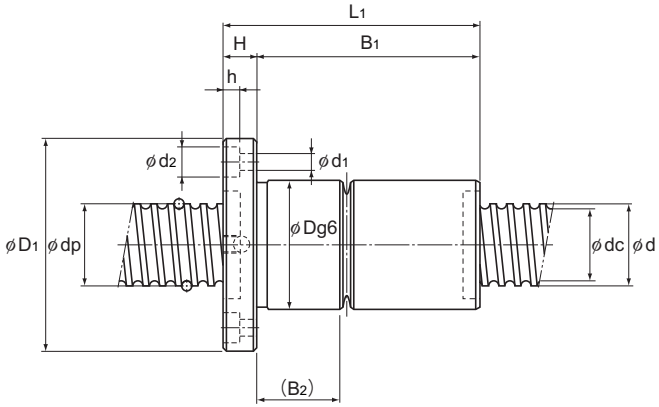

JPF

Unit: mm

Nut dimensions								Screw shaft inertial moment/mm	Nut mass	Shaft mass
Flange diameter D_1	Overall length L_1	H	B_1	B_2	PCD	$d_1 \times d_2 \times h$	Greasing hole A	$kg \cdot cm^2/mm$	kg	kg/m
46	52	10	42	16.5	36	4.5×8×4.5	M6	2.96×10^{-4}	0.22	1.0
46	60	10	50	20	36	4.5×8×4.5	M6	2.96×10^{-4}	0.24	0.99
49	60	10	50	19.5	39	4.5×8×4.5	M6	5.05×10^{-4}	0.3	1.34
57	80	11	69	26.5	45	5.5×9.5×5.5	M6	1.23×10^{-3}	0.46	2.15
66	80	11	69	26	51	5.5×9.5×5.5	M6	3.01×10^{-3}	0.6	3.45
72	112	12	100	42	58	6.6×11×6.5	M6	3.01×10^{-3}	1.2	3.26
69	80	12	68	25	55	6.6×11×6.5	M6	4.74×10^{-3}	0.66	4.27
69	90	12	78	35	55	6.6×11×6.5	M6	4.74×10^{-3}	0.72	4.44
88	135	15	120	53.5	70	9×14×8.5	M6	8.08×10^{-3}	1.84	5.49
98	138	18	120	53.5	77	11×17.5×11	M6	1.29×10^{-2}	2.22	6.91
104	138	18	120	53.5	82	11×17.5×11	PT 1/8	1.97×10^{-2}	2.42	8.81

No Preload Type of Rolled Ball Screw

Screw shaft outer diameter	6 to 16
Lead	1 to 30

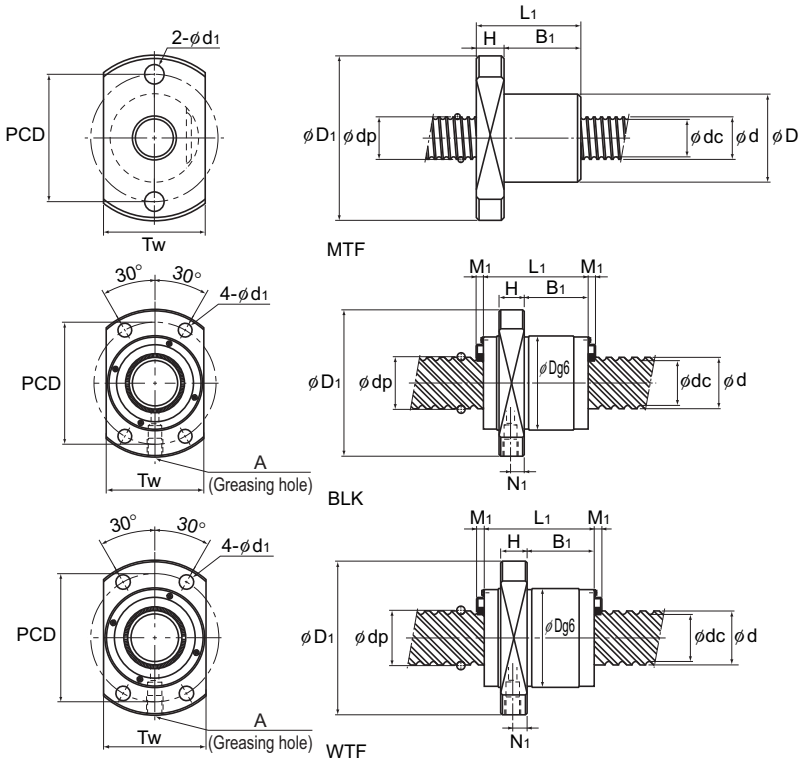

Screw shaft outer diameter d	Lead Ph	Model No.	Ball center-to-center diameter dp	Thread minor diameter dc	No. of loaded circuits Rows x turns	Basic load rating Ca kN	Basic load rating C_0a kN	Rigidity K N/μm	Outer diameter D	Flange diameter D_1
6	1	MTF 0601-3.7	6.15	5.3	1×3.7	0.7	1.2	70	13	30
8	2	MTF 0802-3.7	8.3	6.6	1×3.7	2.1	3.8	90	20	40
10	2	MTF 1002-3.7	10.3	8.6	1×3.7	2.3	4.8	110	23	43
	6	BTK 1006-2.6	10.5	7.8	1×2.65	2.8	4.9	88	26	42
12	2	MTF 1202-3.7	12.3	10.6	1×3.7	2.5	5.8	130	25	47
	8	BTK 1208-2.6	12.65	9.7	1×2.65	3.8	6.8	108	29	45
14	4	BTK 1404-3.6	14.4	11.5	1×3.65	5.5	11.5	150	31	50
	5	BTK 1405-2.6	14.5	11.2	1×2.65	5	11.4	116	32	50
15	10	BLK 1510-5.6	15.75	12.5	2×2.8	9.8	25.2	260	34	57
	20	WTF 1520-3	15.75	12.5	2×1.5	5.5	14.2	140	32	53
		WTF 1520-6	15.75	12.5	4×1.5	10.1	28.5	280	32	53
	30	WTF 1530-2	15.75	12.5	4×0.6	4.3	9.3	120	32	53
		WTF 1530-3	15.75	12.5	2×1.6	5.6	12.4	160	32	53
		CNF 1530-6	15.75	12.5	4×1.6	10.1	24.7	310	32	53
16	5	BTK 1605-2.6	16.75	13.5	1×2.65	5.4	13.3	130	34	54
	16	BLK 1616-3.6	16.65	13.7	2×1.8	5.8	12.9	170	32	53
		BLK 1616-7.2	16.65	13.7	4×1.8	10.5	25.9	340	32	53

Note) Model MTF cannot be attached with seal.
Model MTF is only sold as sets (ball screw nut and screw shaft).
Model MTF is applied only with anti-rust oil.

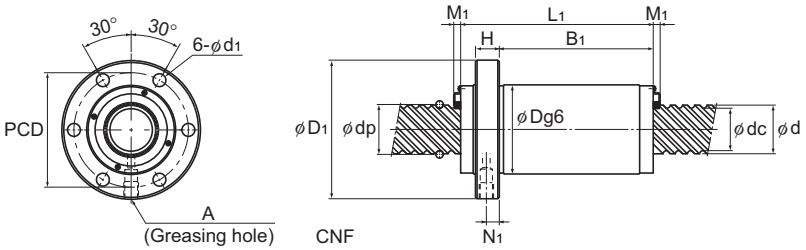

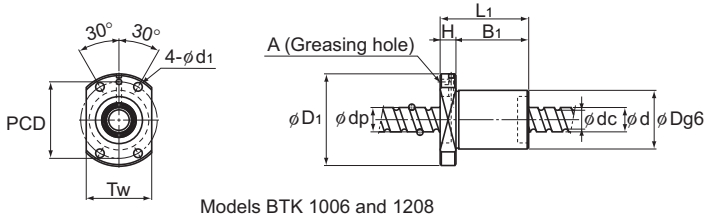

Models BTK 1006 and 1208

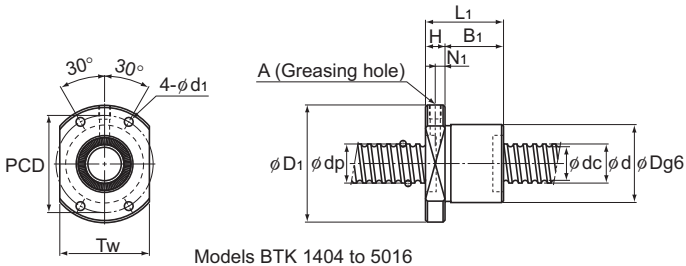

Models BTK 1404 to 5016

Unit: mm

Nut dimensions									Axial clear-ance	Standard shaft length	Screw shaft inertial moment/mm	Nut mass	Shaft mass
	Overall length					Greasing hole		Seal					
	L_1	H	B_1	PCD	d_1	T_w	N_1	A	M_1			kg·cm²/mm	kg	kg/m
	21	5	16	21.5	3.4	17	—	—	—	0.05	150, 250	9.99×10^{-6}	0.03	0.19
	28	6	22	30	4.5	24	—	—	—	0.05		3.16×10^{-5}	0.08	0.31
	28	6	22	33	4.5	27	—	—	—	0.05	200, 300	7.71×10^{-5}	0.1	0.52
	36	8	28	34	4.5	29	—	3	—	0.05		7.71×10^{-5}	0.19	0.48
	30	8	22	36	5.5	29	—	—	—	0.05		1.6×10^{-4}	0.13	0.77
	44	8	36	37	4.5	32	—	3	—	0.05		1.6×10^{-4}	0.20	0.72
	40	10	30	40	4.5	37	5	M6	—	0.1	500, 1000	2.96×10^{-4}	0.23	1.0
	40	10	30	40	4.5	38	5	M6	—	0.1		2.96×10^{-4}	0.24	0.99
	44	10	24	45	5.5	40	5	M6	3.5	0.1		3.9×10^{-4}	0.26	1.16
	45	10	28	43	5.5	33	5	M6	3.5	0.1		3.9×10^{-4}	0.20	1.17
	45	10	28	43	5.5	33	5	M6	3.5	0.1		3.9×10^{-4}	0.20	1.17
	33	10	17	43	5.5	33	5	M6	3.5	0.1		3.9×10^{-4}	0.22	1.19
	63	10	47	43	5.5	33	5	M6	3.5	0.1		3.9×10^{-4}	0.4	1.19
	63	10	47	43	5.5	—	5	M6	3.5	0.1		3.9×10^{-4}	0.42	1.19
	40	10	30	44	4.5	40	5	M6	—	0.1		5.05×10^{-4}	0.27	1.34
	38	10	21.5	42	4.5	38	5	M6	3.5	0.1		5.05×10^{-4}	0.21	1.35
	38	10	21.5	42	4.5	38	5	M6	3.5	0.1		5.05×10^{-4}	0.25	1.35

No Preload Type of Rolled Ball Screw

Screw shaft outer diameter	18 to 30
Lead	5 to 60

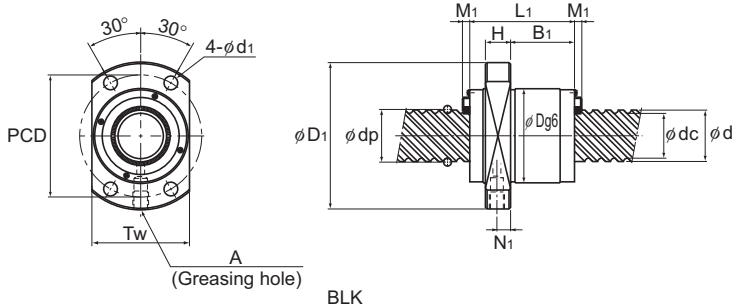

BLK

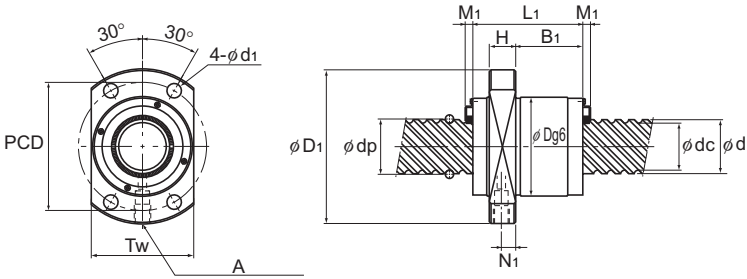

WTF

Screw shaft outer diameter d	Lead Ph	Model No.	Ball center-to-center diameter dp	Thread minor diameter dc	No. of loaded circuits Rows x turns	Basic load rating Ca kN	Basic load rating C_0a kN	Rigidity K N/μm	Outer diameter D	Flange diameter D_1
18	8	BTK 1808-3.6	19.3	14.4	1×3.65	13.1	31	210	50	80
20	5	BTK 2005-2.6	20.5	17.2	1×2.65	6	16.5	150	40	60
	10	BTK 2010-2.6	21.25	16.4	1×2.65	10.6	25.1	160	52	82
	20	BLK 2020-3.6	20.75	17.5	2×1.8	7.7	22.3	210	39	62
		BLK 2020-7.2	20.75	17.5	4×1.8	13.9	44.6	410	39	62
	40	WTF 2040-2	20.75	17.5	4×0.65	5.4	13.6	160	37	57
		WTF 2040-3	20.75	17.5	2×1.65	6.6	17.2	200	37	57
		CNF 2040-6	20.75	17.5	4×1.65	12	34.4	400	37	57
25	5	BTK 2505-2.6	25.5	22.2	1×2.65	6.7	20.8	180	43	67
	10	BTK 2510-5.3	26.8	20.2	2×2.65	31.2	83.7	400	60	96
	25	BLK 2525-3.6	26	22	2×1.8	12.1	35	270	47	74
		BLK 2525-7.2	26	22	4×1.8	21.9	69.9	520	47	74
	50	WTF 2550-2	26	21.9	4×0.65	8.5	21.2	200	45	69
		WTF 2550-3	26	21.9	2×1.65	10.4	26.9	260	45	69
		CNF 2550-6	26	21.9	4×1.65	18.9	53.9	460	45	69
28	6	BTK 2806-2.6	28.5	25.2	1×2.65	7	23.4	200	50	80
		BTK 2806-5.3	28.5	25.2	2×2.65	12.8	46.8	390	50	80
30	60	WTF 3060-2	31.25	26.4	4×0.65	11.8	30.6	240	55	89
		WTF 3060-3	31.25	26.4	2×1.65	14.5	38.9	310	55	89
		CNF 3060-6	31.25	26.4	4×1.65	26.2	77.7	600	55	89

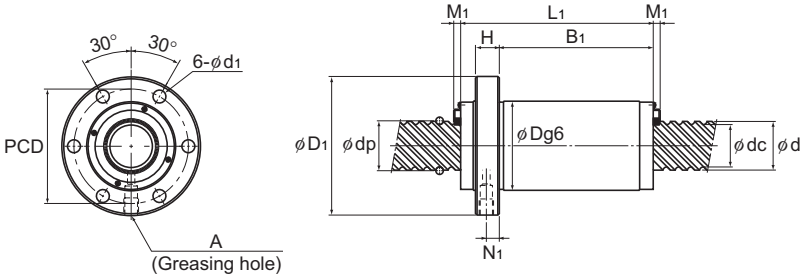

CNF

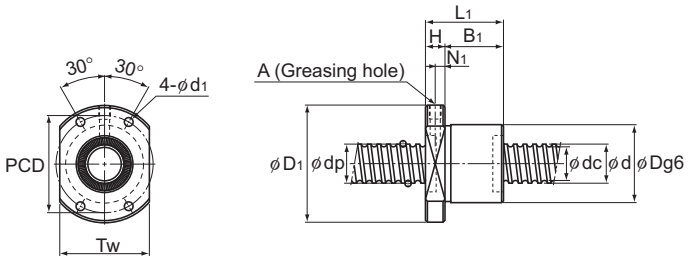

Models BTK 1404 to 5016

Unit: mm

Nut dimensions									Axial clear-ance	Standard shaft length	Screw shaft inertial moment/mm	Nut mass	Shaft mass
	Overall length						Greasing hole		Seal				
	L_1	H	B_1	PCD	d_1	T_W	N_1	A	M_1			kg·cm²/mm	kg	kg/m
	61	12	49	65	6.6	60	5	M6	—	0.1	500, 1000	8.09×10^{-4}	0.98	1.71
	40	10	30	50	4.5	46	5	M6	—	0.1	500, 1000, 1500	1.23×10^{-3}	0.35	2.15
	61	12	49	67	6.6	64	5	M6	—	0.1		1.23×10^{-3}	1.08	2.16
	45	10	27.5	50	5.5	46	5	M6	3.5	0.1		1.23×10^{-3}	0.35	2.18
	45	10	27.5	50	5.5	46	5	M6	3.5	0.1		1.23×10^{-3}	0.35	2.18
	41.5	10	25.5	47	5.5	38	5.5	M6	3.5	0.1		1.23×10^{-3}	0.25	2.12
	81.5	10	65.5	47	5.5	38	5.5	M6	3.5	0.1		1.23×10^{-3}	0.5	2.12
	81	10	65	47	5.5	—	5.5	M6	3.5	0.1		1.23×10^{-3}	0.5	2.12
	40	10	30	55	5.5	50	5	M6	—	0.1		3.01×10^{-3}	0.37	3.45
	98	15	83	78	9	72	5	M6	—	0.1		3.01×10^{-3}	2.06	3.26
	55	12	35	60	6.6	56	6	M6	3.5	0.1	1000, 1500, 2000	3.01×10^{-3}	0.64	3.41
	55	12	35	60	6.6	56	6	M6	3.5	0.1		3.01×10^{-3}	0.64	3.41
	52	12	31.5	57	6.6	46	7	M6	3.5	0.1		3.01×10^{-3}	0.45	3.34
	102	12	81.5	57	6.6	46	7	M6	3.5	0.1		3.01×10^{-3}	0.85	3.34
	102	12	81.5	57	6.6	—	7	M6	3.5	0.1		3.01×10^{-3}	0.85	3.34
	47	12	35	65	6.6	60	6	M6	—	0.1	500, 1000, 2000, 2500	4.74×10^{-3}	0.66	4.44
	65	12	53	65	6.6	60	6	M6	—	0.1		4.74×10^{-3}	0.84	4.44
	62.5	15	37.5	71	9	56	9	M6	3.8	0.14	1000, 2000, 3000, 4000	6.24×10^{-3}	0.8	4.84
	122.5	15	97.5	71	9	56	9	M6	3.8	0.14		6.24×10^{-3}	1.7	4.84
	122	15	97	71	9	—	9	M6	3.8	0.14		6.24×10^{-3}	1.7	4.84

Description of Each Option⇒A15-165 Dimensions⇒B15-227

No Preload Type of Rolled Ball Screw

Screw shaft outer diameter	32 to 50
Lead	10 to 100

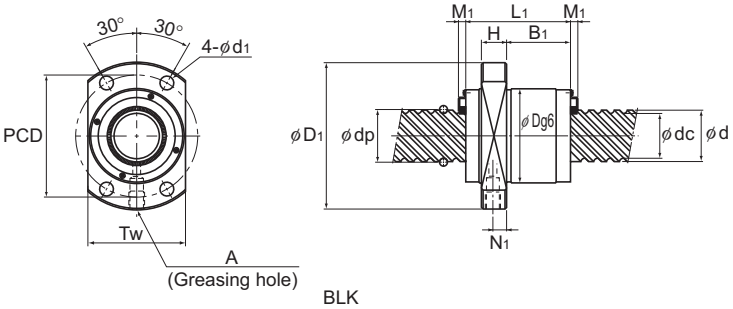

Screw shaft outer diameter d	Lead Ph	Model No.	Ball center-to-center diameter dp	Thread minor diameter dc	No. of loaded circuits Rows x turns	Basic load rating Ca kN	Basic load rating C_0a kN	Rigidity K N/μm	Outer diameter D	Flange diameter D_1
32	10	BTK 3210-2.6	33.75	27.2	1×2.65	19.8	53.8	250	67	103
		BTK 3210-5.3	33.75	27.2	2×2.65	36	107.5	490	67	103
	32	BLK 3232-3.6	33.25	28.3	2×1.8	17.3	53.9	330	58	92
		BLK 3232-7.2	33.25	28.3	4×1.8	31.3	107.8	650	58	92
36	10	BTK 3610-2.6	37	30.5	1×2.65	20.8	59.8	270	70	110
		BTK 3610-5.3	37	30.5	2×2.65	37.8	118.7	530	70	110
	20	BLK 3620-5.6	37.75	31.2	2×2.8	39.8	121.7	570	70	110
	24	BLK 3624-5.6	38	30.7	2×2.8	46.2	137.4	590	75	115
	36	BLK 3636-3.6	37.4	31.7	2×1.8	22.4	70.5	370	66	106
		BLK 3636-7.2	37.4	31.7	4×1.8	40.6	141.1	730	66	106
40	10	BTK 4010-5.3	41.75	35.2	2×2.65	40.3	134.9	590	76	116
	40	BLK 4040-3.6	41.75	35.2	2×1.8	28.1	89.8	420	73	114
		BLK 4040-7.2	41.75	35.2	4×1.8	51.1	179.6	810	73	114
	80	WTF 4080-2	41.75	35.2	4×0.65	19.8	54.5	320	73	114
		WTF 4080-3	41.75	35.2	2×1.65	24.3	69.2	400	73	114
45	12	BTK 4512-5.3	46.5	39.2	2×2.65	49.5	169	650	82	128
50	16	BTK 5016-5.3	52.7	42.9	2×2.65	93.8	315.2	930	102	162
	50	BLK 5050-3.6	52.2	44.1	2×1.8	42.1	140.4	510	90	135
		BLK 5050-7.2	52.2	44.1	4×1.8	76.3	280.7	1000	90	135
	100	WTF 50100-2	52.2	44.1	4×0.65	29.6	85.2	390	90	135
		WTF 50100-3	52.2	44.1	2×1.65	36.3	108.1	500	90	135

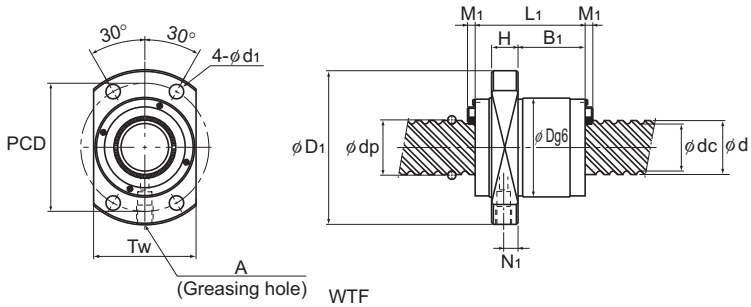

WTF

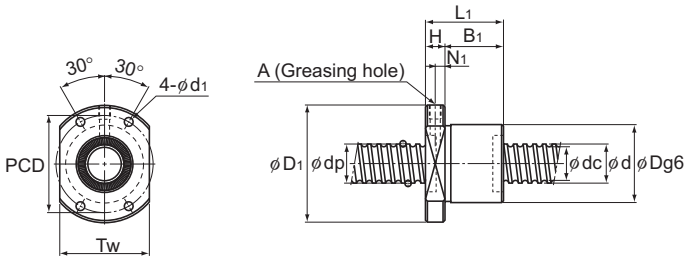

Models BTK 1404 to 5016

Unit: mm

Nut dimensions										Axial clear-ance	Standard shaft length	Screw shaft inertial moment/mm	Nut mass	Shaft mass
	Overall length						Greasing hole		Seal					
	L_1	H	B_1	PCD	d_1	T_w	N_1	A	M_1			kg・cm²/mm	kg	kg/m
	68	15	53	85	9	78	5	M6	—	0.14	500, 1000, 2000, 2500	8.08×10^{-3}	1.77	5.49
	98	15	83	85	9	78	5	M6	—	0.14		8.08×10^{-3}	2.35	5.49
	70	15	45	74	9	68	7.5	M6	3.8	0.14	1000, 1500, 2000, 2500	8.08×10^{-3}	1.14	5.69
	70	15	45	74	9	68	7.5	M6	3.8	0.14		8.08×10^{-3}	1.14	5.69
	70	17	53	90	11	82	7	M6	—	0.17	500, 1000, 2000, 2500, 3000	1.29×10^{-2}	1.94	6.91
	100	17	83	90	11	82	7	M6	—	0.17		1.29×10^{-2}	2.55	6.91
	78	17	45	90	11	80	8.5	M6	5	0.17	1000, 1500, 2000, 3000	1.29×10^{-2}	1.74	7.09
	94	18	59	94	11	86	9	M6	5	0.17		1.29×10^{-2}	2.42	7.02
	77	17	50	85	11	76	8.5	M6	5	0.17		1.29×10^{-2}	1.74	7.12
	77	17	50	85	11	76	8.5	M6	5	0.17		1.29×10^{-2}	1.74	7.12
	100	17	83	96	11	88	7	M6	—	0.17	1000, 1500, 2000, 3000, 3500	1.97×10^{-2}	2.91	8.81
	85	17	56.5	93	11	84	8.5	M6	5.4	0.17	1000, 1500, 2000, 3000	1.97×10^{-2}	2.16	8.76
	85	17	56.5	93	11	84	8.5	M6	5.4	0.17		1.97×10^{-2}	2.16	8.76
	79	17	50.5	93	11	74	8.5	M6	5.4	0.17		1.97×10^{-2}	2.1	8.66
	159	17	130.5	93	11	74	8.5	M6	5.4	0.17		1.97×10^{-2}	3.67	8.66
	118	20	98	104	14	94	8	M6	—	0.17	1000, 1500, 2000, 3000, 3500	3.16×10^{-2}	3.9	11.08
	145	25	120	132	18	104	12.5	PT 1/8	—	0.2		4.82×10^{-2}	7.8	13.66
	106	20	72	112	14	104	10	M6	5.4	0.2	1000, 1500, 2000, 3000	4.82×10^{-2}	3.89	13.79
	106	20	72	112	14	104	10	M6	5.4	0.2		4.82×10^{-2}	3.86	13.79
	98	20	64	112	14	92	10	M6	5.4	0.2		4.82×10^{-2}	3.5	13.86
	198	20	164	112	14	92	10	M6	5.4	0.2		4.82×10^{-2}	6.4	13.86

No Preload Type of Rolled Ball Screw (Square Nut)

Screw shaft outer diameter	14 to 45
Lead	4 to 12

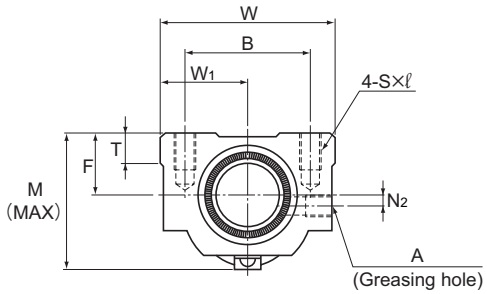

BNT

Screw shaft outer diameter d	Lead Ph	Model No.	Ball center-to-center diameter dp	Thread minor diameter dc	No. of loaded circuits Rows x turns	Basic load rating Ca kN	Basic load rating C_0a kN	Rigidity K N/μm	Width W	Center height F	Overall length L_1
14	4	BNT 1404-3.6	14.4	11.5	1×3.65	5.5	11.5	150	34	13	35
	5	BNT 1405-2.6	14.5	11.2	1×2.65	5	11.4	110	34	13	35
16	5	BNT 1605-2.6	16.75	13.5	1×2.65	5.4	13.3	130	42	16	36
18	8	BNT 1808-3.6	19.3	14.4	1×3.65	13.1	31	210	48	17	56
20	5	BNT 2005-2.6	20.5	17.2	1×2.65	6	16.5	150	48	17	35
	10	BNT 2010-2.6	21.25	16.4	1×2.65	10.6	25.1	160	48	18	58
25	5	BNT 2505-2.6	25.5	22.2	1×2.65	6.7	20.8	180	60	20	35
	10	BNT 2510-5.3	26.8	20.2	2×2.65	31.2	83.7	400	60	23	94
28	6	BNT 2806-2.6	28.5	25.2	1×2.65	7	23.4	200	60	22	42
		BNT 2806-5.3	28.5	25.2	2×2.65	12.8	46.8	390	60	22	67
32	10	BNT 3210-2.6	33.75	27.2	1×2.65	19.8	53.8	250	70	26	64
		BNT 3210-5.3	33.75	27.2	2×2.65	36	107.5	490	70	26	94
36	10	BNT 3610-2.6	37	30.5	1×2.65	20.8	59.3	270	86	29	64
		BNT 3610-5.3	37	30.5	2×2.65	37.8	118.7	530	86	29	96
45	12	BNT 4512-5.3	46.5	39.2	2×2.65	49.5	169	650	100	36	115

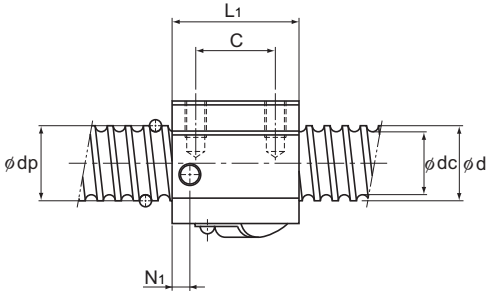

BNT

Unit: mm

Nut dimensions										Axial clear-ance	Screw shaft inertial moment/mm	Nut mass	Shaft mass
	Mounting hole												
	B	C	S×ℓ	W_1	T	M	N_1	N_2	A		kg・cm²/mm	kg	kg/m
	26	22	M4×7	17	6	30	6	2	M6	0.1	2.96×10^{-4}	0.15	1.0
	26	22	M4×7	17	6	31	6	2	M6	0.1	2.96×10^{-4}	0.15	0.99
	32	22	M5×8	21	21.5	32.5	6	2	M6	0.1	5.05×10^{-4}	0.3	1.34
	35	35	M6×10	24	10	44	8	3	M6	0.1	8.09×10^{-4}	0.47	1.71
	35	22	M6×10	24	9	39	5	3	M6	0.1	1.23×10^{-3}	0.28	2.15
	35	35	M6×10	24	9	46	10	2	M6	0.1	1.23×10^{-3}	0.5	2.16
	40	22	M8×12	30	9.5	45	7	5	M6	0.1	3.01×10^{-3}	0.41	3.45
	40	60	M8×12	30	10	55	10	—	M6	0.1	3.01×10^{-3}	1.18	3.26
	40	18	M8×12	30	10	50	8	—	M6	0.1	4.74×10^{-3}	0.81	4.44
	40	40	M8×12	30	10	50	8	—	M6	0.1	4.74×10^{-3}	0.78	4.44
	50	45	M8×12	35	12	62	10	—	M6	0.14	8.08×10^{-3}	1.3	5.49
	50	60	M8×12	35	12	62	10	—	M6	0.14	8.08×10^{-3}	2.0	5.49
	60	45	M10×16	43	17	67	11	—	M6	0.17	1.29×10^{-2}	1.8	6.91
	60	60	M10×16	43	17	67	11	—	M6	0.17	1.29×10^{-2}	2.4	6.91
	75	75	M12×20	50	20.5	80	13	—	M6	0.2	3.16×10^{-2}	4.1	11.08

Model Number Coding

Model number coding

Ball Screw Nut

BTK1405-2.6 ZZ

- BTK1405-2.6: Model number
- ZZ: Seal symbol
  - no symbol: without seal
  - ZZ: brush seal attached to both ends of the ball screw nut (see A15-166)

Screw Shaft

TS 14 05 +500L C7

- C7: Accuracy symbol (see A15-18) (no symbol for class C10)
- +500L: Overall screw shaft length (in mm)
- 05: Lead (in mm)
- 14: Screw shaft outer diameter (in mm)
- TS: Symbol for rolled ball screw shaft

Combination of the Ball Screw Nut and the Screw Shaft

BTK1405-2.6 ZZ +500L C7 T

- BTK1405-2.6: Model number
- T: Symbol for rolled shaft
- C7: Accuracy symbol (see A15-18) (no symbol for class C10)
- +500L: Overall screw shaft length (in mm)
- ZZ: Seal symbol
  - no symbol: without seal
  - ZZ: brush seal attached to both ends of the ball screw nut (see A15-166)

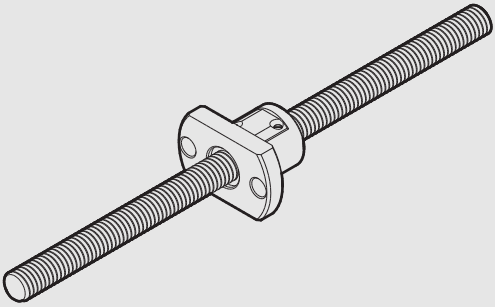

Unfinished Shaft Ends Rolled Ball Screw
Model MTF

Ball Screw

B Product Specifications

Dimensional Drawing, Dimensional Table

Unfinished Shaft Ends
Rolled Ball Screw Model MTF B15-194

Options

Dimensions of the Ball Screw Nut Attached with Wiper Ring W and QZ Lubricator B15-228

A Technical Descriptions of the Products (Separate)

Technical Descriptions

Structure and Features A15-145
Types and Features A15-145

* Please see the separate "A Technical Descriptions of the Products".

Unfinished Shaft Ends
Rolled Ball Screw Model MTF

Screw shaft outer diameter	6, 8, 10, 12
Lead	1, 2

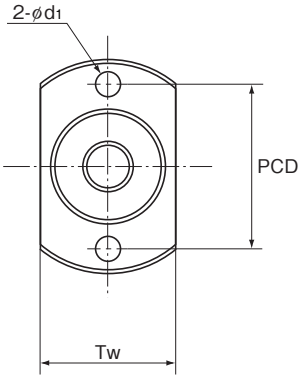

Model No.	Screw shaft outer diameter d	Lead Ph	Ball center-to-center diameter dp	Thread minor diameter dc	No. of loaded circuits Rows×turns	Basic load rating Ca kN	Basic load rating C_0a kN	Rigidity K N/μm	Outer diameter D	Flange diameter D_1
MTF 0601-3.7	6	1	6.15	5.3	1×3.7	0.7	1.2	70	13	30
MTF 0802-3.7	8	2	8.3	6.6	1×3.7	2.1	3.8	90	20	40
MTF 1002-3.7	10	2	10.3	8.6	1×3.7	2.3	4.8	110	23	43
MTF 1202-3.7	12	2	12.3	10.6	1×3.7	2.5	5.8	130	25	47

Model number coding

MTF 08 02 -3.7 +250L C7 T

- MTF: Model No.
- 08: Screw shaft outer diameter (in mm)
- 02: Lead (in mm)
- -3.7: Overall shaft length (in mm)
- +250L: Overall shaft length (in mm)
- C7: Accuracy symbol (No symbol for Normal Grade)
- T: Symbol for ball screw shaft

Note) Model MTF is only sold as sets (ball screw nut and screw shaft).
Model MTF is applied only with anti-rust oil.

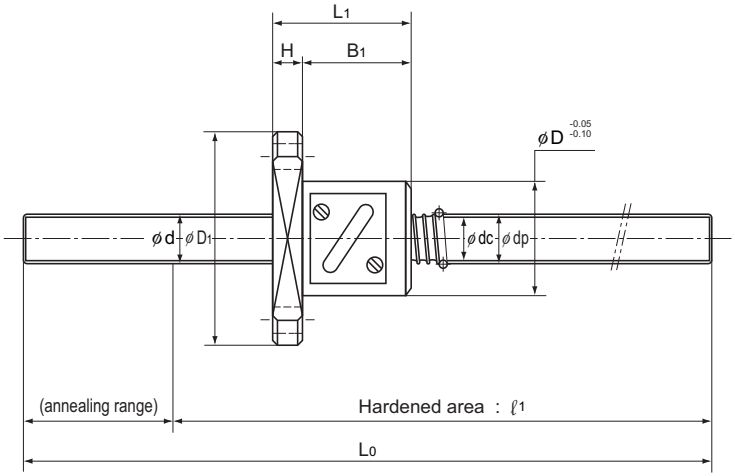

Unit: mm

Nut dimensions							Axial clear-ance	Standard shaft length		Screw shaft inertial moment/mm	Nut mass	Shaft mass
	Overall length L_1	H	B_1	PCD	d_1	T_w			ℓ_1	kg・cm²/mm	kg	kg/m
	21	5	16	21.5	3.4	17	0.05	150	100	9.99×10^{-6}	0.03	0.19
								250	200			
	28	6	22	30	4.5	24	0.05	150	95	3.16×10^{-5}	0.08	0.31
								250	195			
	28	6	22	33	4.5	27	0.05	200	140	7.71×10^{-5}	0.1	0.52
								300	240			
	30	8	22	36	5.5	29	0.05	200	140	1.6×10^{-4}	0.13	0.77
								300	240			

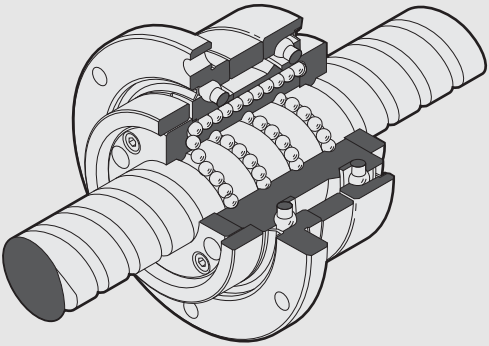

Rolled Rotary Ball Screw
Model BLR

Ball Screw

B Product Specifications

Dimensional Drawing, Dimensional Table

Model BLR Large Lead Rotary Nut Rolled Ball Screw B15-198
Maximum Length of the Ball Screw Shaft B15-200

A Technical Descriptions of the Products (Separate)

Technical Descriptions

Structure and Features A15-147
Type A15-147
Service Life A15-44
Axial Clearance A15-25
Accuracy Standards A15-148
Example of Assembly..... A15-149

* Please see the separate "A Technical Descriptions of the Products".

Model BLR Large Lead Rotary Nut Rolled Ball Screw

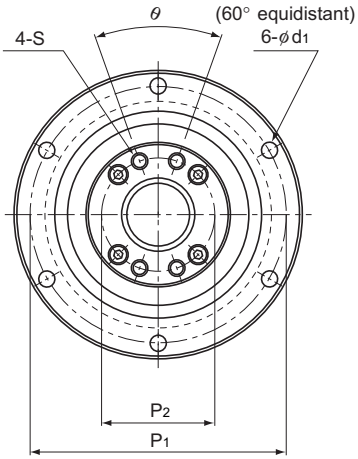

Model No.	Screw shaft outer diameter d	Thread minor diameter dc	Lead Ph	Ball center-to-center diameter dp	Basic load rating Ca kN	Basic load rating C_0a kN	Outer diameter D	Flange diameter D_1	Overall length L_1	D_3
BLR 1616-3.6	16	13.7	16	16.65	5.8	12.9	$52^{0}_{-0.007}$	68	43.5	$40^{0}_{-0.025}$
BLR 2020-3.6	20	17.5	20	20.75	7.7	22.3	$62^{0}_{-0.007}$	78	54	$50^{0}_{-0.025}$
BLR 2525-3.6	25	21.9	25	26	12.1	35	$72^{0}_{-0.007}$	92	65	$58^{0}_{-0.03}$
BLR 3232-3.6	32	28.3	32	33.25	17.3	53.9	$80^{0}_{-0.007}$	105	80	$66^{0}_{-0.03}$
BLR 3636-3.6	36	31.7	36	37.4	22.4	70.5	$100^{0}_{-0.008}$	130	93	$80^{0}_{-0.03}$
BLR 4040-3.6	40	35.2	40	41.75	28.1	89.8	$110^{0}_{-0.008}$	140	98	$90^{0}_{-0.035}$
BLR 5050-3.6	50	44.1	50	52.2	42.1	140.4	$120^{0}_{-0.008}$	156	126	$100^{0}_{-0.035}$

Model number coding

BLR2020-3.6 K UU +1000L C7 T

- BLR2020-3.6: Model number
- K: Flange orientation symbol (*1)
- UU: Symbol for support bearing seal (*2)
- +1000L: Overall screw shaft length (in mm)
- C7: Accuracy symbol (*3)
- T: Symbol for rolled Ball Screw

(*1) See A15-149. (*2) UU: seal attached on both ends; No symbol: without seal (*3) See A15-18.

Note) For clearance in the axial direction, see A15-25.

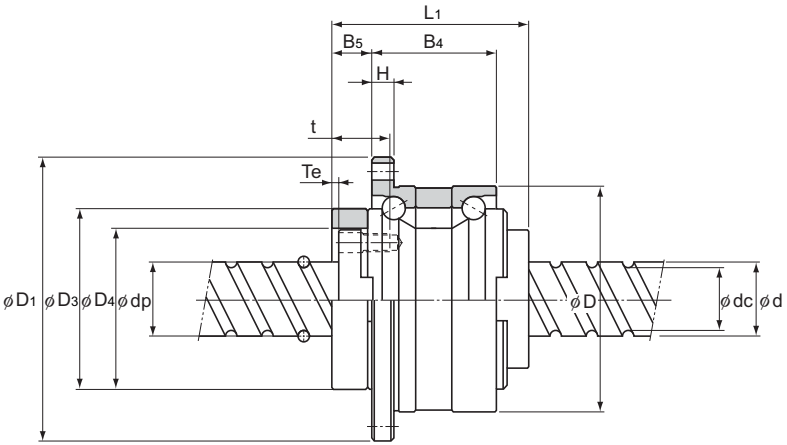

Unit: mm

Ball screw dimensions												Support bearing basic load rating		Nut inertial moment	Nut mass	Shaft mass
	D_4	H	B_4	B_5	Te	P_1	P_2	S	t	d_1	θ°	Ca kN	C_0a kN	kg・cm²	kg	kg/m
	32 $^{+0.025}_{0}$	5	27.5	9	2	60	25	M4	12	4.5	40	19.4	19.2	0.48	0.38	1.35
	39 $^{+0.025}_{0}$	6	34	11	2	70	31	M5	16	4.5	40	26.8	29.3	1.44	0.68	2.17
	47 $^{+0.025}_{0}$	8	43	12.5	3	81	38	M6	19	5.5	40	28.2	33.3	3.23	1.1	3.41
	58 $^{+0.03}_{0}$	9	55	14	3	91	48	M6	19	6.6	40	30	39	6.74	1.74	5.69
	66 $^{+0.03}_{0}$	11	62	17	3	113	54	M8	22	9	40	56.4	65.2	16.8	3.2	7.12
	73 $^{+0.03}$	11	68	16.5	3	123	61	M8	22	9	50	59.3	74.1	27.9	3.95	8.76
	90 $^{+0.035}_{0}$	12	80	25	4	136	75	M10	28	11	50	62.2	83	58.2	6.22	13.79

Maximum Length of the Ball Screw Shaft

Table1 shows the manufacturing limit lengths of precision Ball Screws by accuracy grades, Table2 shows the manufacturing limit lengths of precision Ball Screws compliant with DIN standard by accuracy grades, and Table3 shows the manufacturing limit lengths of rolled Ball Screws by accuracy grades.
If the shaft dimensions exceed the manufacturing limit in Table1,Table2 or Table3, contact THK.

Table1 Maximum Length of the Precision Ball Screw by Accuracy Grade

Unit: mm

Screw shaft outer diameter	Overall screw shaft length					
	C0	C1	C2	C3	C5	C7
4	90	110	120	120	120	120
6	150	170	210	210	210	210
8	230	270	340	340	340	340
10	350	400	500	500	500	500
12	440	500	630	680	680	680
13	440	500	630	680	680	680
14	530	620	770	870	890	890
15	570	670	830	950	980	1100
16	620	730	900	1050	1100	1400
18	720	840	1050	1220	1350	1600
20	820	950	1200	1400	1600	1800
25	1100	1400	1600	1800	2000	2400
28	1300	1600	1900	2100	2350	2700
30	1450	1700	2050	2300	2570	2950
32	1600	1800	2200	2500	2800	3200
36	2000	2100	2550	2950	3250	3650
40		2400	2900	3400	3700	4300
45		2750	3350	3950	4350	5050
50		3100	3800	4500	5000	5800
55		3450	4150	5300	6050	6500
63		4000	5200	5800	6700	7700
70			6300	6450	7650	9000
80				7900	9000	10000
100				10000	10000	

Table2 Manufacturing limit lengths of precision Ball Screws (DIN standard compliant Ball Screws)

Unit: mm

Shaft diameter	Ground shaft			CES shaft			
	C3	C5	C7	Cp3	Cp5	Ct5	Ct7
16	1050	1100	1400	1050	1100	1100	1400
20	1400	1600	1800	1400	1600	1600	1800
25	1800	2000	2400	1800	2000	2000	2400
32	2500	2800	3200	2500	2800	2800	3200
40	3400	3700	4300	3400	3700	3700	4300
50	4500	5000	5800	—	—	—	—
63	5800	6700	7700	—	—	—	—

Table3 Maximum Length of the Rolled Ball Screw by Accuracy Grade

Unit: mm

Screw shaft outer diameter	Overall screw shaft length		
	C7	C8	C10
6 to 8	320	320	—
10 to 12	500	1000	—
14 to 15	1500	1500	1500
16 to 18	1500	1800	1800
20	2000	2200	2200
25	2000	3000	3000
28	3000	3000	3000
30	3000	3000	4000
32 to 36	3000	4000	4000
40	3000	5000	5000
45	3000	5500	5500
50	3000	6000	6000

Ball Screw

Ball Screw Peripherals

Model EK Square Type Support Unit on the Fixed Side

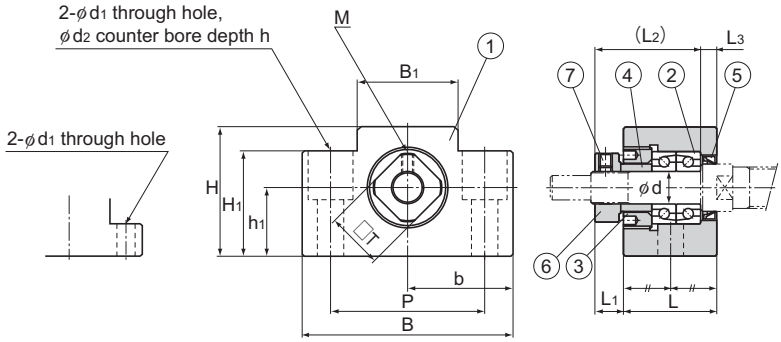

Models EK 4 and 5 Models EK 6 and 8

Model No.	Shaft diameter d	L	L_1	L_2	L_3	B	H	b ±0.02
EK 4	4	15	5.5	17.5	3	34	19	17
EK 5	5	16.5	5.5	18.5	3.5	36	21	18
EK 6	6	20	5.5	22	3.5	42	25	21
EK 8	8	23	7	26	4	52	32	26
EK 10	10	24	6	29.5	6	70	43	35
EK 12	12	24	6	29.5	6	70	43	35
EK 15	15	25	6	36	5	80	49	40
EK 20	20	42	10	50	10	95	58	47.5

Models EK 4 to 8

Part No.	Part name	No. of units
1	Housing	1
2	Bearing	1 set
3	Set nut	1
4	Collar	2
5	Seal	1
6	Lock Nut	1
7	Hexagonal socket-head setscrew (with a set piece)	1

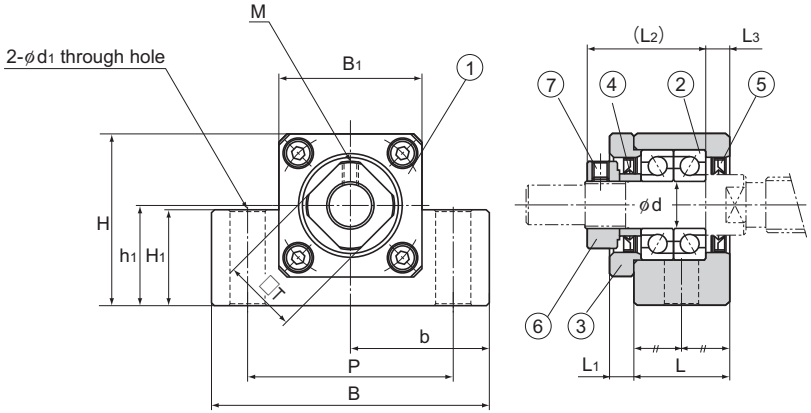

Models EK 10 to 20

Unit: mm

	h_1 ±0.02	B_1	H_1	P	d_1	d_2	h	M	T	Bearing used	Mass kg
	10	18	7	26	4.5	—	—	M2.6	10	AC4-12P5	0.06
	11	20	8	28	4.5	—	—	M2.6	11	AC5-14P5	0.08
	13	18	20	30	5.5	9.5	11	M3	12	AC6-16P5	0.14
	17	25	26	38	6.6	11	12	M3	14	79M8DFGMP5	0.24
	25	36	24	52	9	—	—	M3	16	7000HTDFGMP5	0.46
	25	36	24	52	9	—	—	M3	19	7001HTDFGMP5	0.44
	30	41	25	60	11	—	—	M3	22	7002HTDFGMP5	0.55
	30	56	25	75	11	—	—	M4	30	7204HTDFGMP5	1.35

Models EK 10 to 20

Part No.	Part name	No. of units
1	Housing	1
2	Bearing	1 set
3	Holding lid	1
4	Collar	2
5	Seal	2
6	Lock Nut	1
7	Hexagonal socket-head setscrew (with a set piece)	1

Model BK Square Type Support Unit on the Fixed Side

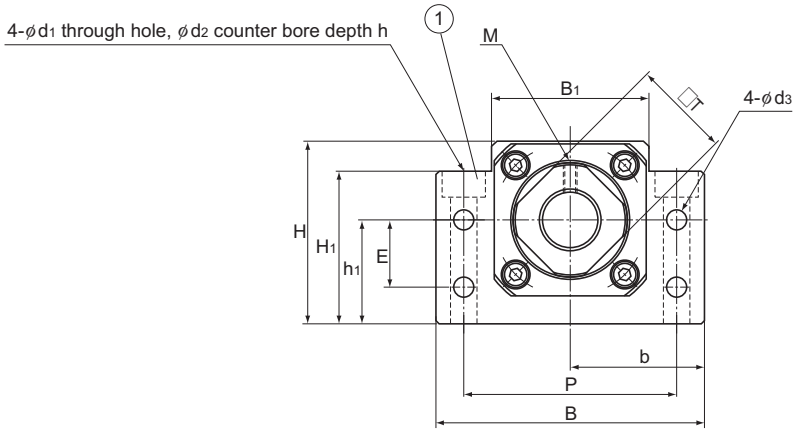

Model No.	Shaft diameter d	L	L_1	L_2	L_3	B	H	b ±0.02	h_1 ±0.02	B_1	H_1
BK 10	10	25	5	29	5	60	39	30	22	34	32.5
BK 12	12	25	5	29	5	60	43	30	25	35	32.5
BK 15	15	27	6	32	6	70	48	35	28	40	38
BK 17	17	35	9	44	7	86	64	43	39	50	55
BK 20	20	35	8	43	8	88	60	44	34	52	50
BK 25	25	42	12	54	9	106	80	53	48	64	70
BK 30	30	45	14	61	9	128	89	64	51	76	78
BK 35	35	50	14	67	12	140	96	70	52	88	79
BK 40	40	61	18	76	15	160	110	80	60	100	90

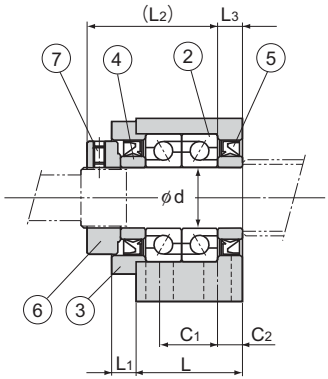

Unit: mm

	E	P	C_1	C_2	d_3	d_1	d_2	h	M	T	Bearing used	Mass kg
	15	46	13	6	5.5	6.6	10.8	5	M3	16	7000HTDFGMP5	0.39
	18	46	13	6	5.5	6.6	10.8	1.5	M3	19	7001HTDFGMP5	0.41
	18	54	15	6	5.5	6.6	11	6.5	M3	22	7002HTDFGMP5	0.57
	28	68	19	8	6.6	9	14	8.5	M4	24	7203HTDFGMP5	1.27
	22	70	19	8	6.6	9	14	8.5	M4	30	7004HTDFGMP5	1.19
	33	85	22	10	9	11	17.5	11	M5	35	7205HTDFGMP5	2.3
	33	102	23	11	11	14	20	13	M6	40	7206HTDFGMP5	3.32
	35	114	26	12	11	14	20	13	M8	50	7207HTDFGMP5	4.33
	37	130	33	14	14	18	26	17.5	M8	50	7208HTDFGMP5	6.5

Part No.	Part name	No. of units
1	Housing	1
2	Bearing	1 set
3	Holding lid	1
4	Collar	2
5	Seal	2
6	Lock Nut	1
7	Hexagonal socket-head setscrew (with a set piece)	1

Model FK Round Type Support Unit on the Fixed Side

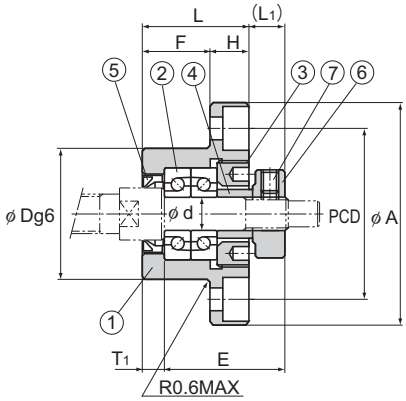

Mounting method A

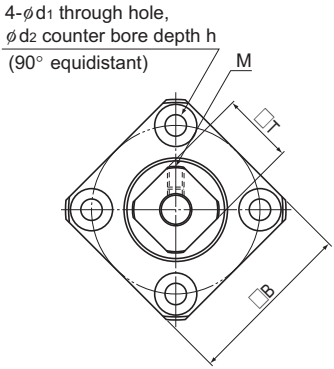

Models FK 4 to 8

Model No.	Shaft diameter d	L	H	F	E	D	A	PCD	B
FK 4	4	15	6	9	17.5	18 $^{-0.006}_{-0.017}$	32	24	25
FK 5	5	16.5	6	10.5	18.5	20 $^{-0.007}_{-0.02}$	34	26	26
FK 6	6	20	7	13	22	22 $^{-0.007}_{-0.02}$	36	28	28
FK 8	8	23	9	14	26	28 $^{-0.007}_{-0.02}$	43	35	35

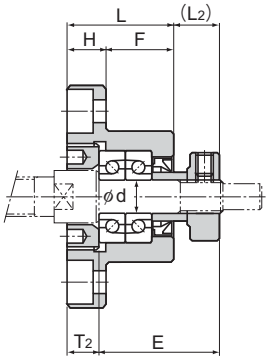

Mounting method B

Unit: mm

	Installation procedure A		Installation procedure B							Bearing used	Mass
	L_1	T_1	L_2	T_2	d_1	d_2	h	M	T		kg
	5.5	3	6.5	4	3.4	6.5	4	M2.6	10	AC4-12P5	0.05
	5.5	3.5	7	5	3.4	6.5	4	M2.6	11	AC5-14P5	0.06
	5.5	3.5	8.5	6.5	3.4	6.5	4	M3	12	AC6-16P5	0.08
	7	4	10	7	3.4	6.5	4	M3	14	79M8DFGMP5	0.15

Part No.	Part name	No. of units
1	Housing	1
2	Bearing	1 set
3	Set nut	1
4	Collar	2
5	Seal	1
6	Lock Nut	1
7	Hexagonal socket-head setscrew (with a set piece)	1

Model FK Round Type Support Unit on the Fixed Side

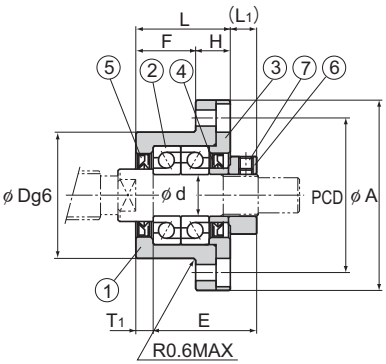

Mounting method A

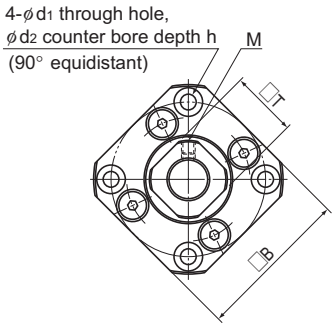

Models FK 10 to 30

Model No.	Shaft diameter d	L	H	F	E	D	A	PCD	B
FK 10	10	27	10	17	29.5	34 $^{-0.009}_{-0.025}$	52	42	42
FK 12	12	27	10	17	29.5	36 $^{-0.009}_{-0.025}$	54	44	44
FK 15	15	32	15	17	36	40 $^{-0.009}_{-0.025}$	63	50	52
FK 20	20	52	22	30	50	57 $^{-0.01}_{-0.029}$	85	70	68
FK 25	25	57	27	30	60	63 $^{-0.01}_{-0.029}$	98	80	79
FK 30	30	62	30	32	61	75 $^{-0.01}_{-0.029}$	117	95	93

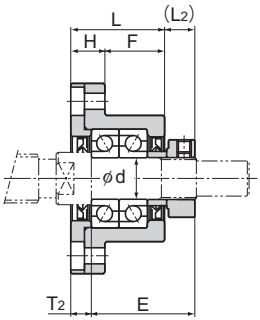

Mounting method B

Unit: mm

	Installation procedure A		Installation procedure B							Bearing used	Mass
	L_1	T_1	L_2	T_2	d_1	d_2	h	M	T		kg
	7.5	5	8.5	6	4.5	8	4	M3	16	7000HTDFGMP5	0.21
	7.5	5	8.5	6	4.5	8	4	M3	19	7001HTDFGMP5	0.22
	10	6	12	8	5.5	9.5	6	M3	22	7002HTDFGMP5	0.39
	8	10	12	14	6.6	11	10	M4	30	7204HTDFGMP5	1.09
	13	10	20	17	9	15	13	M5	35	7205HTDFGMP5	1.49
	11	12	17	18	11	17.5	15	M6	40	7206HTDFGMP5	2.32

Part No.	Part name	No. of units
1	Housing	1
2	Bearing	1 set
3	Holding lid	1
4	Collar	2
5	Seal	2
6	Lock Nut	1
7	Hexagonal socket-head setscrew (with a set piece)	1

Model EF Square Type Support Unit on the Supported Side

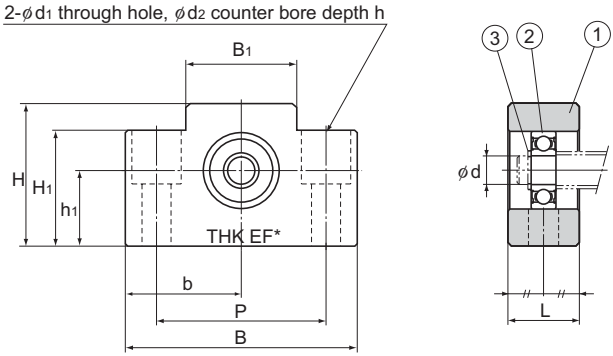

Models EF 6 and 8

Model No.	Shaft diameter d	L	B	H	b ±0.02	h_1 ±0.02	B_1
EF 6	6	12	42	25	21	13	18
EF 8	6	14	52	32	26	17	25
EF 10	8	20	70	43	35	25	36
EF 12	10	20	70	43	35	25	36
EF 15	15	20	80	49	40	30	41
EF 20	20	26	95	58	47.5	30	56

Note) The area marked with "*" is imprinted with a numeric character(s) as part of the model number.

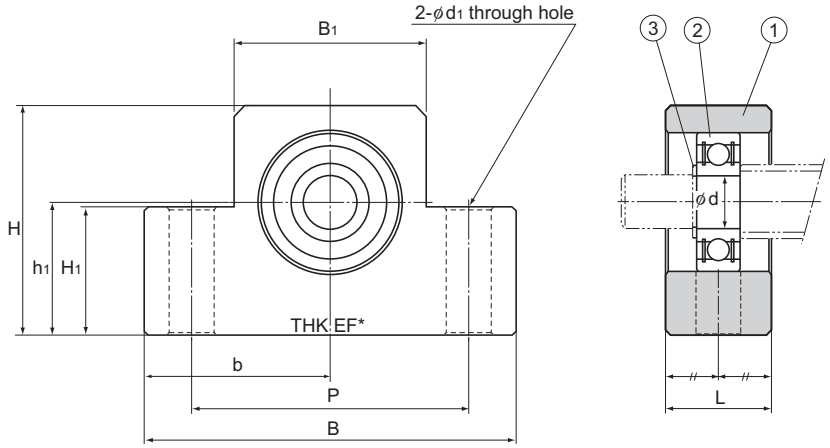

Models EF 10 to 20

Unit: mm

	H_1	P	d_1	d_2	h	Bearing used	Snap ring used	Mass kg
	20	30	5.5	9.5	11	606ZZ	C6	0.07
	26	38	6.6	11	12	606ZZ	C6	0.13
	24	52	9	—	—	608ZZ	C8	0.33
	24	52	9	—	—	6000ZZ	C10	0.32
	25	60	9	—	—	6002ZZ	C15	0.38
	25	75	11	—	—	6204ZZ	C20	0.63

Part No.	Part name	No. of units
1	Housing	1
2	Bearing	1
3	Snap ring	1

Model BF Square Type Support Unit on the Supported Side

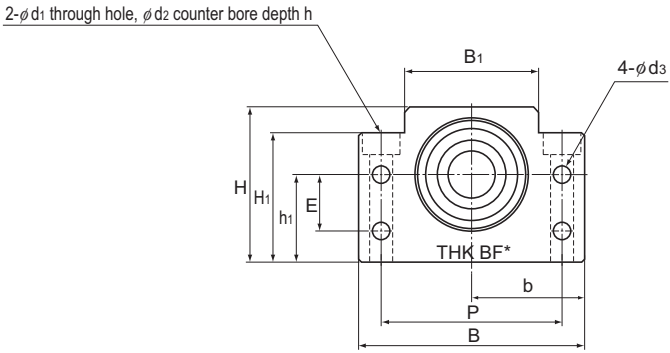

Model No.	Shaft diameter d	L	B	H	b ±0.02	h_1 ±0.02	B_1	H_1
BF 10	8	20	60	39	30	22	34	32.5
BF 12	10	20	60	43	30	25	35	32.5
BF 15	15	20	70	48	35	28	40	38
BF 17	17	23	86	64	43	39	50	55
BF 20	20	26	88	60	44	34	52	50
BF 25	25	30	106	80	53	48	64	70
BF 30	30	32	128	89	64	51	76	78
BF 35	35	32	140	96	70	52	88	79
BF 40	40	37	160	110	80	60	100	90

Note) The area marked with "*" is imprinted with a numeric character(s) as part of the model number.

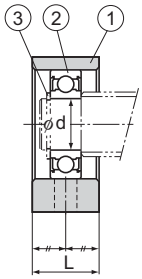

Unit: mm

	E	P	d_3	d_1	d_2	h	Bearing used	Snap ring used	Mass kg
	15	46	5.5	6.6	10.8	5	608ZZ	C8	0.29
	18	46	5.5	6.6	10.8	1.5	6000ZZ	C10	0.3
	18	54	5.5	6.6	11	6.5	6002ZZ	C15	0.38
	28	68	6.6	9	14	8.5	6203ZZ	C17	0.74
	22	70	6.6	9	14	8.5	6004ZZ	C20	0.76
	33	85	9	11	17.5	11	6205ZZ	C25	1.42
	33	102	11	14	20	13	6206ZZ	C30	1.97
	35	114	11	14	20	13	6207ZZ	C35	2.22
	37	130	14	18	26	17.5	6208ZZ	C40	3.27

Part No.	Part name	No. of units
1	Housing	1
2	Bearing	1
3	Snap ring	1

Model FF Round Type Support Unit on the Supported Side

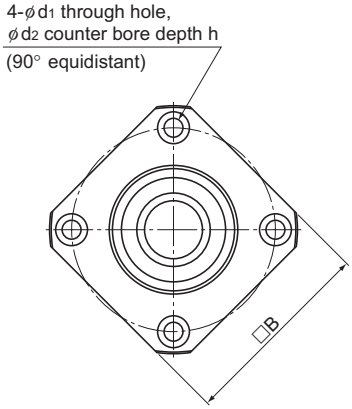

Model No.	Shaft diameter d	L	H	F	D	A
FF 6	6	10	6	4	22 $^{-0.007}_{-0.02}$	36
FF 10	8	12	7	5	28 $^{-0.007}_{-0.02}$	43
FF 12	10	15	7	8	34 $^{-0.009}_{-0.025}$	52
FF 15	15	17	9	8	40 $^{-0.009}_{-0.025}$	63
FF 20	20	20	11	9	57 $^{-0.01}_{-0.029}$	85
FF 25	25	24	14	10	63 $^{-0.01}_{-0.029}$	98
FF 30	30	27	18	9	75 $^{-0.01}_{-0.029}$	117

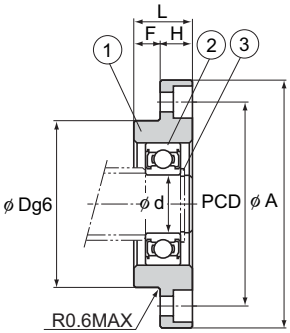

Unit: mm

	PCD	B	d_1	d_2	h	Bearing used	Snap ring used	Mass kg
	28	28	3.4	6.5	4	606ZZ	C6	0.04
	35	35	3.4	6.5	4	608ZZ	C8	0.07
	42	42	4.5	8	4	6000ZZ	C10	0.11
	50	52	5.5	9.5	5.5	6002ZZ	C15	0.2
	70	68	6.6	11	6.5	6204ZZ	C20	0.27
	80	79	9	14	8.5	6205ZZ	C25	0.67
	95	93	11	17.5	11	6206ZZ	C30	1.07

Part No.	Part name	No. of units
1	Housing	1
2	Bearing	1
3	Snap ring	1

Recommended Shapes of Shaft Ends - Shape H (H1, H2 and H3) (For Support Unit Models FK and EK)

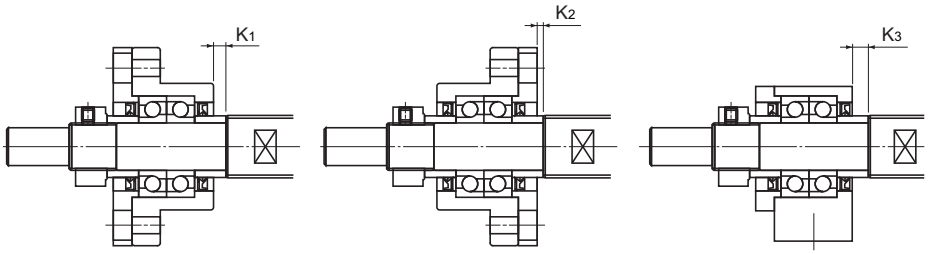

Model FK　　Model FK　　Model EK

Support Unit model No.		Ball screw shaft outer diameter	Shaft outer diameter of the bearung				Metric screw thread	
Model FK	Model EK	d	A	B	E	F	M	S
FK4	EK4	6	4	3	23	5	M4×0.5	7
FK5	EK5	8	5	4	25	6	M5×0.5	7
FK6	EK6	8	6	4	30	8	M6×0.75	8
FK8	EK8	12	8	6	35	9	M8×1	10
FK10	EK10	14	10	8	36	15	M10×1	11
FK10	EK10	15	10	8	36	15	M10×1	11
FK12	EK12	16	12	10	36	15	M12×1	11
FK12	EK12	18	12	10	36	15	M12×1	11
FK15	EK15	20	15	12	49	20	M15×1	13
FK15	EK15	25	15	12	49	20	M15×1	13
FK20	EK20	28	20	17	64	25	M20×1	17
FK20	EK20	30	20	17	64	25	M20×1	17
FK20	EK20	32	20	17	64	25	M20×1	17
FK25	—	36	25	20	76	30	M25×1.5	20
FK30	—	40	30	25	72	38	M30×1.5	25

Note) Support Units are designed to have dimensions so that combinations of models FK and FF, models EK and EF or models BK and BF are used on the same shaft.
If desiring the shaft end to be machined at THK, add the shape symbol in the end of the Ball Screw model number.
(Example) TS2505+500L-H2K
(Shape H2 on the fixed side; shape K on the supported side)
For the perpendicularity of the end face of the bearing, refer to JIS B 1192-1997.

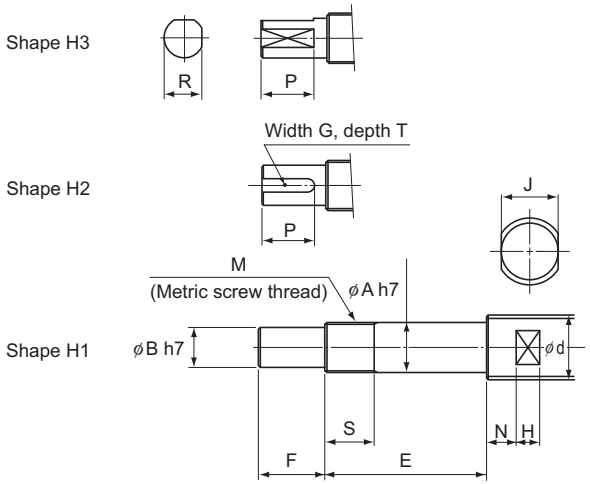

Unit: mm

	Width across flat			Shape H2 Keyway			Shape H3 Cut flat on two side		Support Unit position		
									Model FK		Model EK
	J	N	H	G N9	T +0.1 0	P	R	P	K_1	K_2	K_3
	4	4	4	—	—	—	2.7	4	1.5	0.5	1.5
	5	4	4	—	—	—	3.7	5	2	0.5	2
	5	4	4	—	—	—	3.7	6	3.5	0.5	3.5
	8	5	5	—	—	—	5.6	7	3.5	0.5	3.5
	10	5	7	2	1.2	11	7.5	11	0.5	−0.5	−0.5
	10	5	7	2	1.2	11	7.5	11	0.5	−0.5	−0.5
	13	6	8	3	1.8	12	9.5	12	0.5	−0.5	−0.5
	13	6	8	3	1.8	12	9.5	12	0.5	−0.5	−0.5
	16	6	9	4	2.5	16	11.3	16	4	2	5
	18	7	10	4	2.5	16	11.3	16	4	2	5
	21	8	11	5	3	21	16	21	1	−3	1
	24	8	12	5	3	21	16	21	1	−3	1
	27	9	13	5	3	21	16	21	1	−3	1
	27	10	13	6	3.5	25	19	25	5	−2	—
	32	10	15	8	4	32	23.5	32	−3	−9	—

Note) The ball nut flange faces the fixed side unless otherwise specified.
If desiring the flange to face the supported side, add symbol G in the end of the Ball Screw model number when placing an order.
(Example) BNFN2505-5RRGO+420LC5-H2KG

Recommended Shapes of Shaft Ends - Shape J (J1, J2 and J3) (For Support Unit Model BK)

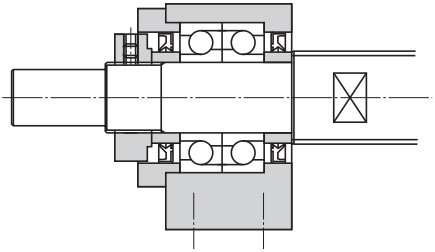

Model BK

Support Unit model No. Model BK	Ball screw shaft outer diameter d	Shaft outer diameter of the bearung A	B	E	F	Metric screw thread M
BK10	14	10	8	39	15	M10×1
BK10	15	10	8	39	15	M10×1
BK12	16	12	10	39	15	M12×1
BK12	18	12	10	39	15	M12×1
BK15	20	15	12	40	20	M15×1
BK17	25	17	15	53	23	M17×1
BK20	28	20	17	53	25	M20×1
BK20	30	20	17	53	25	M20×1
BK20	32	20	17	53	25	M20×1
BK25	36	25	20	65	30	M25×1.5
BK30	40	30	25	72	38	M30×1.5
BK35	45	35	30	83	45	M35×1.5
BK40	50	40	35	98	50	M40×1.5
BK40	55	40	35	98	50	M40×1.5

Note) Support Units are designed to have dimensions so that combinations of models FK and FF, models EK and EF or models BK and BF are used on the same shaft.
If desiring the shaft end to be machined at THK, add the shape symbol in the end of the Ball Screw model number.
(Example) TS2505+500L-J2K
(Shape J2 on the fixed side; shape K on the supported side)
For the perpendicularity of the end face of the bearing, refer to JIS B 1192-1997.

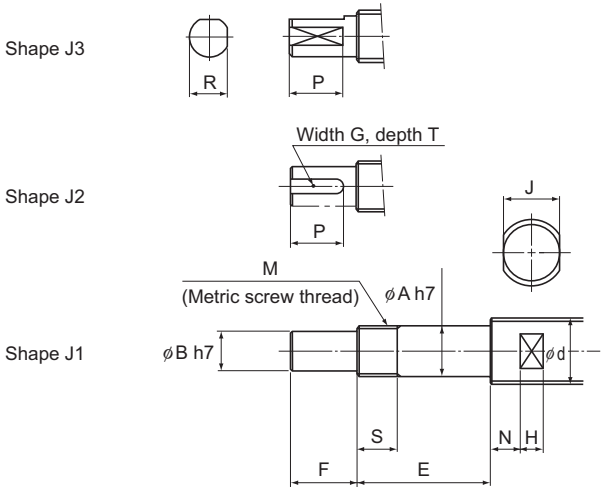

Unit: mm

	Width across flat			Shape J2 Keyway			Shape J3 Cut flat on two side	
S	J	N	H	G N9	T +0.1 0	P	R	P
16	10	5	7	2	1.2	11	7.5	11
16	10	5	7	2	1.2	11	7.5	11
14	13	6	8	3	1.8	12	9.5	12
14	13	6	8	3	1.8	12	9.5	12
12	16	6	9	4	2.5	16	11.3	16
17	18	7	10	5	3	21	14.3	21
15	21	8	11	5	3	21	16	21
15	24	8	12	5	3	21	16	21
15	27	9	13	5	3	21	16	21
18	27	10	13	6	3.5	25	19	25
25	32	10	15	8	4	32	23.5	32
28	36	12	15	8	4	40	28.5	40
35	41	14	19	10	5	45	33	45
35	46	14	20	10	5	45	33	45

Note) The ball nut flange faces the fixed side unless otherwise specified.
If desiring the flange to face the supported side, add symbol G in the end of the Ball Screw model number when placing an order.
(Example) BNFN2505-5RRGO+420LC5-J2KG

Recommended Shapes of Shaft Ends - Shape K (For Support Unit Models FF, EF and BF)

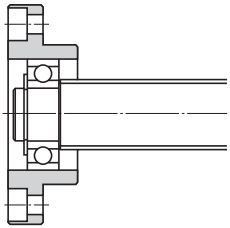

Model FF

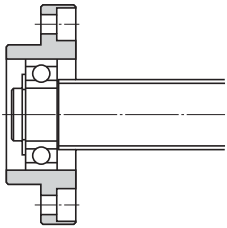

Model FF

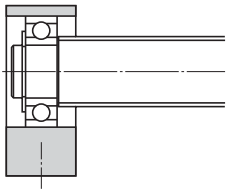

Model EF

Model BF

Support Unit model No.			Ball screw shaft outer diameter	Shaft outer diameter of the bearung
Model FF	Model EF	Model BF	d	A
FF10	EF10	BF10	14	8
FF10	EF10	BF10	15	8
FF12	EF12	BF12	16	10
FF12	EF12	BF12	18	10
FF15	EF15	BF15	20	15
FF15	EF15	BF15	25	15
—	—	BF17 *	25	17
FF20	EF20	BF20 **	28	20
FF20	EF20	BF20 **	30	20
FF20	EF20	BF20 **	32	20
FF25	—	BF25	36	25
FF30	—	BF30	40	30
—	—	BF35	45	35
—	—	BF40	50	40
—	—	BF40	55	40

Note) Support Units are designed to have dimensions so that combinations of models FK and FF, models EK and EF or models BK and BF are used on the same shaft.
If desiring the shaft end to be machined at THK, add the shape symbol in the end of the Ball Screw model number.
(Example) TS2505+500L-H2K
(Shape H2 on the fixed side; shape K on the supported side)
For the perpendicularity of the end face of the bearing, refer to JIS B 1192-1997.

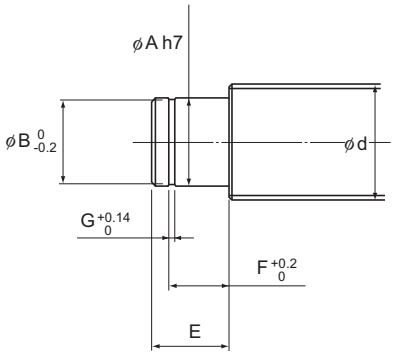

Unit: mm

	E	Snap ring groove		
		B	F	G
	10	7.6	7.9	0.9
	10	7.6	7.9	0.9
	11	9.6	9.15	1.15
	11	9.6	9.15	1.15
	13	14.3	10.15	1.15
	13	14.3	10.15	1.15
	16	16.2	13.15	1.15
	19 (16)	19	15.35 (13.35)	1.35
	19 (16)	19	15.35 (13.35)	1.35
	19 (16)	19	15.35 (13.35)	1.35
	20	23.9	16.35	1.35
	21	28.6	17.75	1.75
	22	33	18.75	1.75
	23	38	19.95	1.95
	23	38	19.95	1.95

Note) * When model BK17 (shaft end shape: J) is used on the fixed side for a Ball Screw with a shaft outer diameter of 25 mm, the shaft end shape on the supported side is that for model BF17.
** The dimensions in the parentheses in the table above are that of model BF20. They differ from those of models FF20 and EF20. When placing an order, be sure to specify the model number of the Support Unit to be used.

Nut Bracket

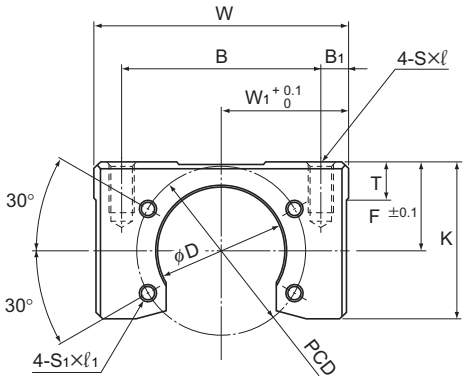

Model No.	Width W	W_1	B	B_1	Overall length L	C	C_1	F	K
MC 1004	48	24	40	4	32	16	10	20	32.5
MC 1205	60	30	47	6.5	36	24	6	21	37
MC 1408	60	30	50	5	36	20	10	21.5	37
MC 2010	86	43	70	8	50	30	10	31	54
MC 2020	86	43	70	8	40	24	8	28	51

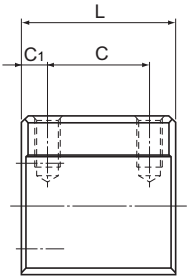

Unit: mm

	T	D	PCD	S×ℓ	S_1×$ℓ_1$	For factory automation equipment Supported Ball Screw models	Mass kg
	9	26.4	36	M5×10	M4×7	BNK1004,BNK1010	0.24
	9	30.4	40	M6×12	M4×7	BNK1205	0.38
	9	34.4	45	M6×12	M5×7	BNK1408,BNK1510,BNK1520,BNK1616	0.34
	16	46.4	59	M10×20	M6×10	BNK2010	1.04
	16	39.4	59	M10×20	M6×10	BNK2020	0.83

Lock Nut

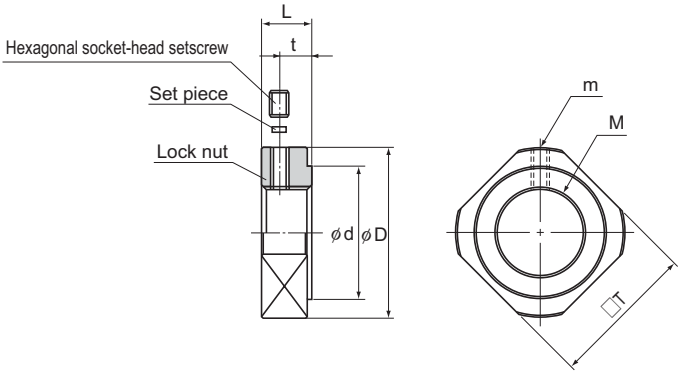

Unit: mm

Model No.	M	m	D	d	L	t	T	Mass kg
RN 4	M4×0.5	M2.6	11.5	8	5	2.7	10	0.003
RN 5	M5×0.5	M2.6	13.5	9	5	2.7	11	0.004
RN 6	M6×0.75	M3	14.5	10	5	2.7	12	0.005
RN 8	M8×1	M3	17	13	6.5	4	14	0.008
RN 10	M10×1	M3	20	15	8	5.5	16	0.013
RN 12	M12×1	M3	22	17	8	5.5	19	0.014
RN 15	M15×1	M3	25	21	8	4.5	22	0.017
RN 17	M17×1	M4	30	25	13	9	24	0.042
RN 20	M20×1	M4	35	26	11	7	30	0.048
RN 25	M25×1.5	M5	43	33	15	10	35	0.096
RN 30	M30×1.5	M6	48	39	20	14	40	0.145
RN 35	M35×1.5	M8	60	46	21	14	50	0.261
RN 40	M40×1.5	M8	63	51	25	18	50	0.304

Ball Screw

Options

Dimensions of Each Model with an Option Attached

Dimensions of the Ball Screw Nut Attached with Wiper Ring W and QZ Lubricator

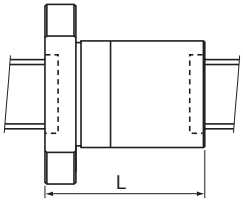

With WW (without QZ)

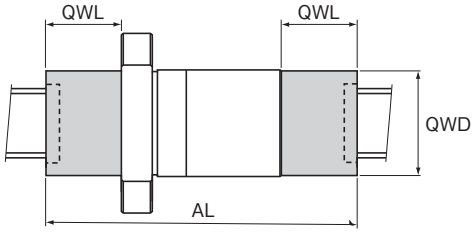

With QZ and WW

Unit: mm

Model No.		WW availability	QZ availability	Dimensions including WW L	Length of protrusion with QZ attached QWL	Outer diameter of protrusion with QZ attached QWD	Dimensions including QZ and WW AL
EBA EBB EBC DIN Standard	1605-4	○	○	50	25	27	110
	2005-3	○	○	45	26.5	33	98
	2505-3	○	○	45	28	39	101
	2510-3	○	○	75	32	39	139
	2510-4	○	○	80	32	39	144
	3205-3	○	○	47	35	45	117
	3205-4	○	○	52	35	45	122
	3205-6	○	○	62	35	45	132
	3210-3	○	○	77	40	49	157
	3210-4	○	○	89	40	49	169
	4005-6	○	○	65	28.5	61	122
	4010-3	○	○	79	44	61	167
	4010-4	○	○	89	44	61	177
	4020-3	○	○	119	47	61	213
	5010-4	○	○	91	37	71	165
	5020-3	○	○	124	40	71	204
	6310-6	○	○	114	39	84	192
	6320-3	○	○	126	30.5	94	187
EPA EPB EPC DIN Standard	1605-6	○	○	60	25	27	115
	2005-6	○	○	61	26.5	33	114
	2505-6	○	○	61	28	39	117
	2510-4	○	○	80	32	39	144
	3205-6	○	○	62	35	45	132
	3205-8	○	○	73	35	45	143
	3210-6	○	○	107	40	49	187
	4005-6	○	○	65	28.5	61	122
	4010-6	○	○	109	44	61	197
	4010-8	○	○	133	44	61	221
	5010-8	○	○	135	37	71	209
	6310-8	○	○	137	39	84	215

Unit: mm

Model No.		WW availability	QZ availability	Dimensions including WW L	Length of protrusion with QZ attached QWL	Outer diameter of protrusion with QZ attached QWD	Dimensions including QZ and WW AL
SBN Retainer	1604-5	○	○	53	29	31	111
	1605-5	○	○	56	29	31	114
	2004-5	○	○	53	27.5	39	108
	2005-5	○	○	56	27.5	43	111
	2504-5	○	○	48	32.5	45	113
	2505-5	○	○	55	32.5	45	120
	2506-5	○	○	62	33	45	128
	2805-5	○	○	59	22	54	103
	2806-5	○	○	63	22	54	97
	3205-5	○	○	56	32	57	120
	3206-5	○	○	63	32	57	127
	3210-7	○	○	120	31	73	182
	3212-5	○	○	117	33	73	183
	3610-7	○	○	123	33	64	189
	3612-7	○	○	140	35	64	210
	3616-5	○	○	140	32	64	204
	4012-5	○	○	119	38	66	195
	4016-5	○	○	144	42	66	228
	4512-5	○	○	119	35.5	79	190
	4516-5	○	○	140	35.5	79	211
	5012-5	○	○	119	38.5	79	196
	5016-5	○	○	143	38.5	79	220
	5020-5	○	○	169	40.5	79	250
SBK Retainer	3620-7.6	○	○	110	28	69	166
	3636-5.6	○	○	134	38	69	210
	4020-7.6	○	○	110	30.5	79	171
	4030-7.6	○	○	148	30.4	79	208.8
	4040-5.6	○	○	146	40.4	79	226.8
	5020-7.6	○	○	110	35	89	180
	5030-7.6	○	○	149	35	89	219

○: available △: available per request X: not available

Note) The L dimension indicates the length of the nut with WW.
For models BLW, BLK (precision and rolling), WGF, BNK1510 or larger (excluding BNK2010), WTF and CNF, fit a wiper ring to the outside of the nut.

Unit: mm

Model No.		WW availability	QZ availability	Dimensions including WW	Length of protrusion with QZ attached	Outer diameter of protrusion with QZ attached	Dimensions including QZ and WW
				L	QWL	QWD	AL
SBK Retainer	5036-7.6	○	○	172	35	89	242
	5050-5.6	○	○	175	45	89	265
	5520-7.6	○	○	110	32	95	174
	5530-7.6	○	○	149	32	95	213
	5536-7.6	○	○	172	32	95	236
HBN Retainer	3210-5	×	△	—	—	—	—
	3610-5	×	△	—	—	—	—
	3612-5	×	△	—	—	—	—
	4010-7.5	×	△	—	—	—	—
	4012-7.5	×	△	—	—	—	—
	5010-7.5	×	△	—	—	—	—
	5012-7.5	×	△	—	—	—	—
	5016-7.5	×	△	—	—	—	—
	6316-7.5	×	△	—	—	—	—
	6316-10.5	×	△	—	—	—	—
	6320-7.5	×	△	—	—	—	—
BNF	1604-3	○	○	45	29	31	103
	1605-2.5	○	○	41	29	31	99
	1605-3	○	○	51	29	31	109
	1605-5	○	○	56	29	31	114
	1606-2.5	○	○	44	29	31	102
	1606-5	○	○	62	29	31	120
	1610-1.5	○	○	42	29	31	100
	1810-2.5	○	△	69	—	—	—
	1810-3	○	△	75	—	—	—
	2004-2.5	○	○	37	27.5	39	92
	2004-5	○	○	49	27.5	39	104
	2005-2.5	○	○	41	27.5	43	96
	2005-3	○	○	52	27.5	43	107
	2005-3.5	○	○	45	27.5	43	100
	2005-5	○	○	56	27.5	43	111
	2006-2.5	○	△	44	—	—	—
	2006-3	○	△	56	—	—	—
	2006-3.5	○	△	50	—	—	—
	2006-5	○	△	62	—	—	—
	2008-2.5	△	△	—	—	—	—
	2010A-1.5	○	△	58	—	—	—
	2012-1.5	△	△	—	—	—	—
	2504-2.5	○	○	36	32.5	45	101
	2504-5	○	○	48	32.5	45	113
	2505-2.5	○	○	40	32.5	45	105
	2505-3	○	○	52	32.5	45	117
	2505-3.5	○	○	45	32.5	45	110
	2505-5	○	○	55	32.5	45	120
	2506-2.5	○	○	44	33	45	110
	2506-3	○	○	56	33	45	122
	2506-3.5	○	○	50	33	45	116
	2506-5	○	○	62	33	45	128
	2508-2.5	○	○	58	34	45	126
	2508-3	○	○	71	34	45	139
	2508-3.5	○	○	66	34	45	134

○: available △: available per request X: not available

Unit: mm

Model No.		WW availability	QZ availability	Dimensions including WW	Length of protrusion with QZ attached	Outer diameter of protrusion with QZ attached	Dimensions including QZ and WW
				L	QWL	QWD	AL
BNF	2508-5	○	○	82	34	45	150
	2510A-2.5	○	○	70	37	45	144
	2512-2.5	○	○	60	33	45	126
	2516-1.5	○	○	60	35	45	130
	2805-2.5	○	△	44	—	—	—
	2805-3	○	△	54	—	—	—
	2805-3.5	○	△	49	—	—	—
	2805-5	○	△	59	—	—	—
	2805-7.5	○	△	74	—	—	—
	2806-2.5	○	△	50	—	—	—
	2806-3.5	○	△	56	—	—	—
	2806-5	○	△	68	—	—	—
	2806-7.5	○	△	86	—	—	—
	2808-2.5	○	△	68	—	—	—
	2808-3	○	△	80	—	—	—
	2808-5	○	△	92	—	—	—
	2810-2.5	○	△	86	—	—	—
	3204-7.5	△	△	—	—	—	—
	3205-2.5	○	○	41	32	57	105
	3205-3	○	○	53	32	57	117
	3205-4.5	○	○	63	32	57	127
	3205-5	○	○	56	32	57	120
	3205-7.5	○	○	71	32	57	135
	3206-2.5	○	○	45	32	57	109
	3206-3	○	○	57	32	57	121
	3206-5	○	○	63	32	57	127
	3208A-2.5	○	○	58	34	57	126
	3208A-3	○	○	71	34	57	139
	3208A-4.5	○	○	87	34	57	155
	3208A-5	○	○	82	34	57	150
	3210A-2.5	○	○	70	31	73	132
	3210A-3	○	○	87	31	73	149
	3210A-3.5	○	○	80	31	73	142
	3210A-5	○	○	100	31	73	162
	3212-3.5	○	○	98	33	73	164
	3606-2.5	○	○	53	30	64	113
	3606-3	○	○	62	30	64	122
	3606-5	○	○	71	30	64	131
	3606-7.5	○	○	89	30	64	149
	3608-2.5	○	○	68	31	64	130
	3608-5	○	○	92	31	64	154
	3608-7.5	○	○	116	31	64	178
	3610-2.5	○	○	81	33	64	147
	3610-5	○	○	111	33	64	177
	3610-7.5	○	○	141	33	64	207
	3612-2.5	○	○	87	35	64	157
	3612-5	○	○	123	35	64	193
	3616-2.5	○	○	92	32	64	156
	3620-1.5	○	○	75	32	64	139
	4005-3	○	○	56	33	66	122
	4005-4.5	○	○	66	33	66	132

Unit: mm

Model No.		WW availability	QZ availability	Dimensions including WW L	Length of protrusion with QZ attached QWL	Outer diameter of protrusion with QZ attached QWD	Dimensions including QZ and WW AL
BNF	4005-6	○	○	81	33	66	147
	4006-2.5	○	○	48	35	66	118
	4006-5	○	○	66	35	66	136
	4006-7.5	○	○	84	35	66	154
	4008-2.5	○	○	58	35	66	128
	4008-3	○	○	71	35	66	141
	4008-5	○	○	82	35	66	152
	4010-2.5	○	○	73	37	66	147
	4010-3	○	○	90	37	66	164
	4010-3.5	○	○	83	37	66	157
	4010-5	○	○	103	37	66	177
	4012-2.5	○	○	83	38	66	159
	4012-3.5	○	○	95	38	66	171
	4012-5	○	○	119	38	66	195
	4016-5	○	○	152	42	66	236
	4506A-2.5	○	△	53	—	—	—
	4506A-5	○	△	71	—	—	—
	4506A-7.5	○	△	89	—	—	—
	4508-2.5	○	△	68	—	—	—
	4508-5	○	△	92	—	—	—
	4508-7.5	○	△	116	—	—	—
	4510-2.5	○	△	81	—	—	—
	4510-3	○	△	94	—	—	—
	4510-5	○	△	111	—	—	—
	4510-7.5	○	△	141	—	—	—
	4512-5	○	△	119	—	—	—
	4520-1.5	○	△	95	—	—	—
	5005-4.5	○	○	68	35.5	79	139
	5008-2.5	○	○	61	36.5	79	134
	5008-5	○	○	85	36.5	79	158
	5008-7.5	○	○	109	36.5	79	182
	5010-2.5	○	○	73	37.5	79	148
	5010-3	○	○	90	37.5	79	165
	5010-3.5	○	○	83	37.5	79	158
	5010-5	○	○	103	37.5	79	178
	5010-7.5	○	○	133	37.5	79	208
	5012-2.5	○	○	87	38.5	79	164
	5012-3.5	○	○	99	38.5	79	176
	5012-5	○	○	123	38.5	79	200
	5016-2.5	○	○	116	38.5	79	193
	5016-5	○	○	164	38.5	79	241
	5020-2.5	○	○	141	40.5	79	222
	5510-2.5	○	△	81	—	—	—
	5510-5	○	△	111	—	—	—
	5510-7.5	○	△	141	—	—	—
	5512-2.5	○	△	93	—	—	—
	5512-3	○	△	107	—	—	—
	5512-3.5	○	△	105	—	—	—
	5512-5	○	△	129	—	—	—
	5512-7.5	○	△	165	—	—	—
	5516-2.5	○	△	116	—	—	—

Unit: mm

Model No.		WW availability	QZ availability	Dimensions including WW L	Length of protrusion with QZ attached QWL	Outer diameter of protrusion with QZ attached QWD	Dimensions including QZ and WW AL
BNF	5516-5	○	△	164	—	—	—
	5520-2.5	○	△	127	—	—	—
	5520-5	○	△	187	—	—	—
	6310-2.5	○	△	77	—	—	—
	6310-5	○	△	107	—	—	—
	6310-7.5	○	△	137	—	—	—
	6312A-2.5	△	△	—	—	—	—
	6312A-5	△	△	—	—	—	—
	6316-5	△	△	—	—	—	—
	6320-2.5	○	△	127	—	—	—
	6320-5	○	△	187	—	—	—
	7010-2.5	△	△	—	—	—	—
	7010-5	△	△	—	—	—	—
	7010-7.5	△	△	—	—	—	—
	7012-2.5	△	△	—	—	—	—
	7012-5	△	△	—	—	—	—
	7012-7.5	△	△	—	—	—	—
	7020-5	△	△	—	—	—	—
	8010-2.5	△	△	—	—	—	—
	8010-5	△	△	—	—	—	—
	8010-7.5	△	△	—	—	—	—
	8020A-2.5	△	△	—	—	—	—
	8020A-5	△	△	—	—	—	—
	8020A-7.5	△	△	—	—	—	—
	10020A-2.5	○	△	131	—	—	—
	10020A-5	○	△	191	—	—	—
	10020A-7.5	○	△	251	—	—	—
BNFN	1604-3	○	○	85	29	31	143
	1605-2.5	○	○	76	29	31	134
	1605-3	○	○	96	29	31	154
	1605-5	○	○	106	29	31	164
	1610-1.5	○	○	72	29	31	130
	1810-2.5	○	△	119	—	—	—
	1810-3	○	△	135	—	—	—
	2004-2.5	○	△	69	—	—	—
	2004-5	○	△	93	—	—	—
	2005-2.5	○	△	76	—	—	—
	2005-3	○	△	97	—	—	—
	2005-3.5	○	△	85	—	—	—
	2005-5	○	△	106	—	—	—
	2006-2.5	○	△	86	—	—	—
	2006-3	○	△	110	—	—	—
	2006-3.5	○	△	98	—	—	—
	2006-5	○	△	122	—	—	—
	2008-2.5	△	△	—	—	—	—
	2010A-1.5	○	△	98	—	—	—
	2012-1.5	△	△	—	—	—	—
	2504-2.5	○	○	68	32.5	45	133
	2504-5	○	○	92	32.5	45	157
	2505-2.5	○	○	75	32.5	45	140
	2505-3	○	○	102	32.5	45	167

○: available △: available per request X: not available

Unit: mm

Model No.		WW availability	QZ availability	Dimensions including WW L	Length of protrusion with QZ attached QWL	Outer diameter of protrusion with QZ attached QWD	Dimensions including QZ and WW AL
	2505-3.5	○	○	85	32.5	45	150
	2505-5	○	○	105	32.5	45	170
	2506-2.5	○	○	86	33	45	152
	2506-3	○	○	110	33	45	176
	2506-3.5	○	○	98	33	45	164
	2506-5	○	○	122	33	45	188
	2508-2.5	○	○	106	34	45	174
	2508-3	○	○	135	34	45	203
	2508-3.5	○	○	122	34	45	190
	2508-5	○	○	154	34	45	222
	2510A-2.5	○	○	120	37	45	194
	2512-2.5	○	○	108	33	45	174
	2516-1.5	○	○	108	35	45	178
	2805-2.5	○	△	74	—	—	—
	2805-3	○	△	94	—	—	—
	2805-3.5	○	△	84	—	—	—
	2805-5	○	△	104	—	—	—
	2805-7.5	○	△	134	—	—	—
	2806-2.5	○	△	86	—	—	—
	2806-3.5	○	△	98	—	—	—
	2806-5	○	△	122	—	—	—
	2806-7.5	○	△	158	—	—	—
	2808-2.5	○	△	116	—	—	—
	2808-3	○	△	144	—	—	—
	2808-5	○	△	164	—	—	—
BNFN	2810-2.5	○	△	146	—	—	—
	3205-2.5	○	○	76	32	57	140
	3205-3	○	○	103	32	57	167
	3205-4.5	○	○	123	32	57	187
	3205-5	○	○	106	32	57	170
	3205-7.5	○	○	136	32	57	200
	3206-2.5	○	○	87	32	57	151
	3206-3	○	○	111	32	57	175
	3206-5	○	○	123	32	57	187
	3208A-2.5	○	○	106	34	57	174
	3208A-3	○	○	135	34	57	203
	3208A-4.5	○	○	167	34	57	235
	3208A-5	○	○	154	34	57	222
	3210A-2.5	○	○	130	31	73	192
	3210A-3	○	○	167	31	73	229
	3210A-3.5	○	○	150	31	73	212
	3210A-5	○	○	190	31	73	252
	3212-3.5	○	○	170	33	73	236
	3606-2.5	○	○	89	30	64	149
	3606-3	○	○	110	30	64	170
	3606-5	○	○	125	30	64	185
	3606-7.5	○	○	161	30	64	221
	3608-2.5	○	○	116	31	64	178
	3608-5	○	○	164	31	64	226
	3608-7.5	○	○	212	31	64	274
	3610-2.5	○	○	141	33	64	207

○: available △: available per request X: not available

Unit: mm

Model No.		WW availability	QZ availability	Dimensions including WW L	Length of protrusion with QZ attached QWL	Outer diameter of protrusion with QZ attached QWD	Dimensions including QZ and WW AL
	3610-5	○	○	201	33	64	267
	3610-7.5	○	○	261	33	64	327
	3612-2.5	○	○	147	35	64	217
	3612-5	○	○	219	35	64	289
	3616-2.5	○	○	172	32	64	236
	3616-5	○	○	268	32	64	332
	3620-1.5	○	○	135	32	64	199
	4005-3	○	○	106	33	66	172
	4005-4.5	○	○	126	33	66	192
	4005-5	○	○	109	33	66	175
	4005-6	○	○	156	33	66	222
	4006-2.5	○	○	90	35	66	160
	4006-5	○	○	126	35	66	196
	4006-7.5	○	○	162	35	66	232
	4008-2.5	○	○	106	35	66	176
	4008-3	○	○	135	35	66	205
	4008-5	○	○	154	35	66	224
	4010-2.5	○	○	133	37	66	207
	4010-3	○	○	170	37	66	244
	4010-3.5	○	○	153	37	66	227
	4010-5	○	○	193	37	66	267
	4012-2.5	○	○	155	38	66	231
	4012-3.5	○	○	179	38	66	255
	4012-5	○	○	227	38	66	303
	4016-5	○	○	280	42	66	364
BNFN	4506A-2.5	○	△	89	—	—	—
	4506A-5	○	△	125	—	—	—
	4506A-7.5	○	△	161	—	—	—
	4508-2.5	○	△	116	—	—	—
	4508-5	○	△	164	—	—	—
	4508-7.5	○	△	212	—	—	—
	4510-2.5	○	△	141	—	—	—
	4510-3	○	△	164	—	—	—
	4510-5	○	△	201	—	—	—
	4510-7.5	○	△	261	—	—	—
	4512-5	○	△	227	—	—	—
	4520-1.5	○	△	175	—	—	—
	5005-3	○	○	108	35.5	79	179
	5005-4.5	○	○	128	35.5	79	199
	5008-2.5	○	○	109	36.5	79	182
	5008-5	○	○	157	36.5	79	230
	5008-7.5	○	○	205	36.5	79	278
	5010-2.5	○	○	133	37.5	79	208
	5010-3	○	○	170	37.5	79	245
	5010-3.5	○	○	153	37.5	79	228
	5010-5	○	○	193	37.5	79	268
	5010-7.5	○	○	253	37.5	79	328
	5012-2.5	○	○	159	38.5	79	236
	5012-3.5	○	○	183	38.5	79	260
	5012-5	○	○	231	38.5	79	308
	5016-2.5	○	○	196	38.5	79	273

Unit: mm

Model No.		WW availability	QZ availability	Dimensions including WW L	Length of protrusion with QZ attached QWL	Outer diameter of protrusion with QZ attached QWD	Dimensions including QZ and WW AL
BNFN	5016-5	○	○	292	38.5	79	369
	5020-2.5	○	○	241	40.5	79	322
	5510-2.5	○	△	141	—	—	—
	5510-5	○	△	201	—	—	—
	5510-7.5	○	△	261	—	—	—
	5512-2.5	○	△	165	—	—	—
	5512-3	○	△	191	—	—	—
	5512-3.5	○	△	189	—	—	—
	5512-5	○	△	237	—	—	—
	5512-7.5	○	△	309	—	—	—
	5516-2.5	○	△	196	—	—	—
	5516-5	○	△	292	—	—	—
	5520-2.5	○	△	227	—	—	—
	5520-5	○	△	347	—	—	—
	6310-2.5	○	△	137	—	—	—
	6310-5	○	△	197	—	—	—
	6310-7.5	○	△	257	—	—	—
	6312A-2.5	△	△	—	—	—	—
	6312A-5	△	△	—	—	—	—
	6316-2.5	△	△	—	—	—	—
	6316-5	△	△	—	—	—	—
	6320-2.5	○	△	227	—	—	—
	6320-5	○	△	347	—	—	—
	7010-2.5	△	△	—	—	—	—
	7010-5	△	△	—	—	—	—
	7010-7.5	△	△	—	—	—	—
	7012-2.5	△	△	—	—	—	—
	7012-5	△	△	—	—	—	—
	7012-7.5	△	△	—	—	—	—
	7020-5	△	△	—	—	—	—
	8010-2.5	△	△	—	—	—	—
	8010-5	△	△	—	—	—	—
	8010-7.5	△	△	—	—	—	—
	8012-5	△	△	—	—	—	—
	8020A-2.5	△	△	—	—	—	—
	8020A-5	△	△	—	—	—	—
	10020A-2.5	○	△	231	—	—	—
	10020A-5	○	△	351	—	—	—
	10020A-7.5	○	△	471	—	—	—
BIF	1605-5	○	○	56	29	31	114
	1606-5	○	○	62	29	31	120
	1810-3	○	△	75	—	—	—
	2004-5	○	△	53	—	—	—
	2005-5	○	△	56	—	—	—
	2006-3	○	△	56	—	—	—
	2006-5	○	△	62	—	—	—
	2505-3	○	○	52	32.5	45	117
	2505-5	○	○	55	32.5	45	120
	2508-5	○	○	82	34	45	150
	2510A-5	○	○	100	37	45	174
	2805-5	○	△	59	—	—	—

○: available △: available per request X: not available

Unit: mm

Model No.		WW availability	QZ availability	Dimensions including WW L	Length of protrusion with QZ attached QWL	Outer diameter of protrusion with QZ attached QWD	Dimensions including QZ and WW AL
BIF	2805-10	○	△	89	—	—	—
	2806-5	○	△	68	—	—	—
	2806-10	○	△	104	—	—	—
	2810-3	○	△	88	—	—	—
	3204-10	△	△	—	—	—	—
	3205-5	○	○	56	32	57	120
	3205-10	○	○	86	32	57	150
	3206-5	○	○	63	32	57	127
	3206-7	○	○	75	32	57	139
	3206-10	○	○	99	32	57	163
	3208A-5	○	○	82	34	57	150
	3208A-7	○	○	98	34	57	166
	3210A-5	○	○	100	31	73	162
	3610-5	○	○	111	33	64	177
	3610-10	○	○	171	33	64	237
	4010-5	○	○	103	37	66	177
	4010-10	○	○	163	37	66	237
	4012-5	○	○	119	38	66	195
	4012-10	○	○	191	38	66	267
	5010-5	○	○	103	37.5	79	178
	5010-10	○	○	163	37.5	79	238
DIK	1404-4	△	△	—	—	—	—
	1404-6	△	△	—	—	—	—
	1605-6	○	△	60	—	—	—
	2004-6	○	△	62	—	—	—
	2004-8	○	△	70	—	—	—
	2005-6	○	△	61	—	—	—
	2006-6	△	△	—	—	—	—
	2008-4	△	△	—	—	—	—
	2504-6	○	△	63	—	—	—
	2504-8	○	△	71	—	—	—
	2505-6	○	△	61	—	—	—
	2506-4	○	△	60	—	—	—
	2506-6	○	△	72	—	—	—
	2508-4	○	△	71	—	—	—
	2508-6	○	△	94	—	—	—
	2510-4	○	△	85	—	—	—
	2805-6	○	△	69	—	—	—
	2805-8	○	△	79	—	—	—
	2806-6	○	△	73	—	—	—
	2810-4	○	△	84	—	—	—
	3204-6	○	△	64	—	—	—
	3204-8	○	△	72	—	—	—
	3204-10	○	△	80	—	—	—
	3205-6	○	△	62	—	—	—
	3205-8	○	△	73	—	—	—
	3206-6	○	△	73	—	—	—
	3206-8	○	△	87	—	—	—
	3210-6	○	△	110	—	—	—
	3212-4	○	△	98	—	—	—
	3610-6	○	△	122	—	—	—

Unit: mm

Model No.		WW availability	QZ availability	Dimensions including WW	Length of protrusion with QZ attached	Outer diameter of protrusion with QZ attached	Dimensions including QZ and WW
				L	QWL	QWD	AL
DIK	3610-8	○	△	143	—	—	—
	3610-10	○	△	164	—	—	—
	4010-6	○	○	113	44	61	201
	4010-8	○	○	137	44	61	225
	4012-6	○	○	138	44	61	226
	4012-8	○	○	163	44	61	251
	4016-4	○	○	120	44	61	208
	5010-6	○	△	114	—	—	—
	5010-8	○	△	137	—	—	—
	5010-10	○	△	160	—	—	—
	5012-6	○	△	145	—	—	—
	5012-8	○	△	170	—	—	—
	5016-4	○	△	129	—	—	—
	5016-6	○	△	175	—	—	—
	6310-8	△	△	—	—	—	—
	6312-6	△	△	—	—	—	—
	6312-8	△	△	—	—	—	—
DK	1404-4	△	△	—	—	—	—
	1404-6	△	△	—	—	—	—
	1605-3	○	△	45	—	—	—
	1605-4	○	△	50	—	—	—
	2004-3	○	△	42	—	—	—
	2004-4	○	△	46	—	—	—
	2005-3	○	△	46	—	—	—
	2005-4	○	△	51	—	—	—
	2006-3	△	△	—	—	—	—
	2006-4	△	△	—	—	—	—
	2008-4	△	△	—	—	—	—
	2504-3	○	△	43	—	—	—
	2504-4	○	△	47	—	—	—
	2505-3	○	△	46	—	—	—
	2505-4	○	△	51	—	—	—
	2506-3	○	△	52	—	—	—
	2506-4	○	△	60	—	—	—
	2508-3	○	△	62	—	—	—
	2508-4	○	△	71	—	—	—
	2510-3	○	△	80	—	—	—
	2510-4	○	△	85	—	—	—
	2805-3	○	△	49	—	—	—
	2805-4	○	△	54	—	—	—
	2806-3	○	△	53	—	—	—
	2806-4	○	△	61	—	—	—
	2810-4	○	△	84	—	—	—
	3204-3	○	△	44	—	—	—
	3204-4	○	△	48	—	—	—
	3205-3	○	△	47	—	—	—
	3205-4	○	△	52	—	—	—
	3205-6	○	△	62	—	—	—
	3206-3	○	△	53	—	—	—
	3206-4	○	△	61	—	—	—
	3210-3	○	△	80	—	—	—

O: Available △:Available on request X: Not supported

Unit: mm

Model No.		WW availability	QZ availability	Dimensions including WW	Length of protrusion with QZ attached	Outer diameter of protrusion with QZ attached	Dimensions including QZ and WW
				L	QWL	QWD	AL
DK	3210-4	○	△	90	—	—	—
	3212-4	○	△	98	—	—	—
	3610-3	○	△	82	—	—	—
	3610-4	○	△	93	—	—	—
	4010-3	○	○	83	44	61	171
	4010-4	○	○	93	44	61	181
	4012-3	○	○	90	44	61	178
	4012-4	○	○	103	44	61	191
	4016-4	○	○	120	44	61	208
	4020-3	○	○	123	44	61	211
	5010-3	○	△	83	—	—	—
	5010-4	○	△	93	—	—	—
	5010-6	○	△	114	—	—	—
	5012-3	○	△	97	—	—	—
	5012-4	○	△	110	—	—	—
	5016-3	○	△	111	—	—	—
	5016-4	○	△	129	—	—	—
	5020-3	○	△	136	—	—	—
	6310-4	△	△	—	—	—	—
	6310-6	△	△	—	—	—	—
	6312-3	△	△	—	—	—	—
	6312-4	△	△	—	—	—	—
	6320-3	△	△	—	—	—	—
DKN	4020-3	○	○	223	47	61	317
	5020-3	○	△	243	—	—	—
	6320-3	△	△	—	—	—	—
BLW	1510-5.6	○	○	96	25.5	31	140
	1616-3.6	△	○	—	29	31	(142.5)
	2020-3.6	○	△	112	—	—	—
	2525-3.6	○	△	131.5	—	—	—
	3232-3.6	○	○	162.6	37.5	53	230
	3636-3.6	○	△	191	—	—	—
	4040-3.6	○	△	201.8	—	—	—
	5050-3.6	○	△	255.8	—	—	—
BLK (Precision)	1510-5.6	○	○	51	25.5	31	95
	1616-2.8	△	○	—	29	31	(112)
	1616-3.6	△	○	—	29	31	(96)
	2020-2.8	○	△	72	—	—	—
	2020-3.6	○	△	52	—	—	—
	2525-2.8	○	△	87	—	—	—
	2525-3.6	○	△	62	—	—	—
	3232-2.8	○	○	109.6	37.5	53	177
	3232-3.6	○	○	77.6	37.5	53	145
	3620-5.6	○	△	88	—	—	—
	3624-5.6	△	△	—	—	—	—
	3636-2.8	○	△	123	—	—	—
	3636-3.6	○	△	87	—	—	—
	4040-2.8	○	△	135.8	—	—	—
	4040-3.6	○	△	95.8	—	—	—
	5050-2.8	○	△	166.8	—	—	—
	5050-3.6	○	△	116.8	—	—	—

( ) indicates the dimensions with QZ but without WW.

Unit: mm

Model No.		WW availability	QZ availability	Dimensions including WW L	Length of protrusion with QZ attached QWL	Outer diameter of protrusion with QZ attached QWD	Dimensions including QZ and WW AL
WGF	0812-3	×	×	—	—	—	—
	1015-3	×	×	—	—	—	—
	1320-3	×	×	—	—	—	—
	1520-1.5	○	○	52	25.5	31	96
	1520-3	○	○	52	25.5	31	96
	1530-1	×	○	—	25.5	31	(84)
	1530-3	×	○	—	25.5	31	(114)
	1540-1.5	×	○	—	25.5	31	(93)
	2040-1	×	△	—	—	—	—
	2040-3	×	△	—	—	—	—
	2060-1.5	×	△	—	—	—	—
	2550-1	×	△	—	—	—	—
	2550-3	×	△	—	—	—	—
	3060-1	×	○	—	37.5	53	(137)
	3060-3	×	○	—	37.5	53	(197)
	3090-1.5	×	○	—	37.5	53	(167)
	4080-1	×	△	—	—	—	—
	4080-3	×	△	—	—	—	—
	50100-1	×	△	—	—	—	—
	50100-3	×	△	—	—	—	—
BNK	0401-3	×	×	—	—	—	—
	0501-3	×	×	—	—	—	—
	0601-3	×	×	—	—	—	—
	0801-3	×	×	—	—	—	—
	0802-3	×	×	—	—	—	—
	0810-3	×	×	—	—	—	—
	1002-3	×	×	—	—	—	—
	1004-2.5	×	×	—	—	—	—
	1010-1.5	×	×	—	—	—	—
	1205-2.5	×	×	—	—	—	—
	1402-3	×	△	—	—	—	—
	1404-3	△	△	—	—	—	—
	1408-2.5	△	△	—	—	—	—
	1510-5.6	○	○	51	25.5	31	95
	1520-3	△	○	—	25.5	31	(96)
	1616-3.6	△	○	—	25.5	31	(93)
	2010-2.5	○	△	54	—	—	—
	2020-3.6	○	△	59	—	—	—
	2520-3.6	△	△	—	—	—	—
BNT (both Precision and Rolled)	1404-3.6	△	△	—	—	—	—
	1405-2.6	△	△	35	—	—	—
	1605-2.6	△	△	36	29	31	94
	1808-3.6	△	△	—	—	—	—
	2005-2.6	△	△	35	—	—	—
	2010-2.6	△	△	58	—	—	—
	2505-2.6	△	△	35	—	—	—
	2510-5.3	△	△	94	—	—	—
	2806-2.6	△	△	42	—	—	—
	2806-5.3	△	△	67	—	—	—
	3210-2.6	△	△	64	—	—	—
	3210-5.3	△	△	94	—	—	—

O: Available △:Available on request X: Not supported

Unit: mm

Model No.		WW availability	QZ availability	Dimensions including WW L	Length of protrusion with QZ attached QWL	Outer diameter of protrusion with QZ attached QWD	Dimensions including QZ and WW AL
BNT (both Precision and Rolled)	3610-2.6	△	△	64	—	—	—
	3610-5.3	△	△	96	—	—	—
	4512-5.3	△	△	115	—	—	—
BLK (Rolled)	1510-5.6	○	○	51	25.5	31	95
	1616-3.6	△	○	—	29	31	(96)
	1616-7.2	△	○	—	29	31	(96)
	2020-3.6	○	△	52	—	—	—
	2020-7.2	○	△	52	—	—	—
	2525-3.6	○	△	62	—	—	—
	2525-7.2	○	△	62	—	—	—
	3232-3.6	○	○	77.6	37.5	53	145
	3232-7.2	○	○	77.6	37.5	53	145
	3620-5.6	○	△	88	—	—	—
	3624-5.6	○	△	104	—	—	—
	3636-3.6	△	△	—	—	—	—
	3636-7.2	△	△	—	—	—	—
	4040-3.6	△	△	—	—	—	—
	4040-7.2	△	△	—	—	—	—
	5050-3.6	△	△	—	—	—	—
	5050-7.2	△	△	—	—	—	—
WTF	1520-3	○	○	52	25.5	31	96
	1520-6	○	○	52	25.5	31	96
	1530-2	×	○	—	25.5	31	(84)
	1530-3	×	○	—	25.5	31	(114)
	2040-2	×	△	—	—	—	—
	2040-3	×	△	—	—	—	—
	2550-2	×	△	—	—	—	—
	2550-3	×	△	—	—	—	—
	3060-2	×	○	—	37.5	53	(137.5)
	3060-3	×	○	—	37.5	53	(197.5)
	4080-2	×	△	—	—	—	—
	4080-3	×	△	—	—	—	—
	50100-2	×	△	—	—	—	—
	50100-3	×	△	—	—	—	—
CNF	1530-6	×	○	—	25.5	31	(114)
	2040-6	×	△	—	—	—	—
	2550-6	×	△	—	—	—	—
	3060-6	×	○	—	37.5	53	(197)
MBF	0401-3.7	×	×	—	—	—	—
	0601-3.7	×	×	—	—	—	—
	0802-3.7	×	×	—	—	—	—
	1002-3.7	×	×	—	—	—	—
	1202-3.7	×	×	—	—	—	—
	1402-3.7	△	△	—	—	—	—
	1404-3.7	△	△	—	—	—	—
BTK	1006-2.6	×	△	—	—	—	—
	1208-2.6	×	△	—	—	—	—
	1404-3.6	△	△	—	—	—	—
	1405-2.6	○	△	40	—	—	—
	1605-2.6	○	△	40	—	—	—
	1808-3.6	△	△	—	—	—	—

( ) indicates the dimensions with QZ but without WW.

Unit: mm

Model No.		WW availability	QZ availability	Dimensions including WW	Length of protrusion with QZ attached	Outer diameter of protrusion with QZ attached	Dimensions including QZ and WW
				L	QWL	QWD	AL
BTK	2005-2.6	○	△	40	—	—	—
	2010-2.6	○	△	61	—	—	—
	2505-2.6	○	△	40	—	—	—
	2510-5.3	○	○	98	32.5	45	163
	2806-2.6	○	△	47	—	—	—
	2806-5.3	○	△	65	—	—	—
	3210-2.6	○	○	68	32	57	132
	3210-5.3	○	○	98	32	57	162
	3610-2.6	○	○	70	31	64	132
	3610-5.3	○	○	100	31	64	162
	4010-5.3	○	○	100	34	66	168
	4512-5.3	△	△	—	—	—	—

O: Supported △:Available on request X: Not supported

Unit: mm

Model No.		WW availability	QZ availability	Dimensions including WW	Length of protrusion with QZ attached	Outer diameter of protrusion with QZ attached	Dimensions including QZ and WW
				L	QWL	QWD	AL
BTK	5016-5.3	○	○	145	35	79	215
JPF	1404-4	△	×	—	—	—	—
	1405-4	△	×	—	—	—	—
	1605-4	○	×	60	—	—	—
	2005-6	○	×	80	—	—	—
	2505-6	○	×	80	—	—	—
	2510-4	○	×	112	—	—	—
	2805-6	○	×	80	—	—	—
	2806-6	○	×	90	—	—	—
	3210-6	○	×	135	—	—	—
	3610-6	○	×	138	—	—	—
	4010-6	○	×	138	—	—	—

( ) indicates the dimensions with QZ but without WW.

Model number coding

BNFN2505-2.5 QZ WW G0 +1000L C5

- BNFN2505-2.5: Model number
- QZ: With QZ Lubricator
- WW: With wiper ring W
- G0: Symbol for clearance in the axial direction (*1)
- +1000L: Overall screw shaft length (in mm)
- C5: Accuracy symbol (*2)

(*1) See A15-25. (*2) See A15-18.

Note) QZ Lubricator and wiper ring W are not sold alone.